amateur radio

Vol. 39, No. 4

APRIL, 1971

Registered at G.P.O., Melbourne, for transmission by post as a periodical

Price 30 Cents

AMERICAN RECORDING TAPE

(New, in sealed boxes)

1500 feet, 7-inch, Acetate, 1½ mil. $3.50
1200 feet, 7-inch, Acetate, 1½ mil. $2.50
1200 feet, 7-inch, Mylar, 1½ mil. $3.00
1200 feet, 5¾-inch, Acetate, 1 mil. $2.20
1200 feet, 5¾-inch, Mylar, 1 mil. $2.50

Postage 10c.

CASSETTE TAPES

Type C120 .... $1.50
Type C90 .... $1.20

New. Postage 10c.

NEW HEADPHONES AND MIKE

Phones 8 ohms, Mike 25 ohms

Price $15.75

METERS

MR2P METERS: square, face size 1¾-in., M/Hole 1½-in., res. 99 ohms. 0-1, 0-25, 0-250, and 0-500 mA. **Price $5.00** nett.

MR2P METERS: 0-5, 0-15, 0-30, 30-30 Amps. (Res. SOM/V). **Price $6.50** nett.

MR2P METERS: 0-15 volt DC, 0-30 volt DC. **Price $5.50.**

MR2P METERS: 0-50, 0-100, 100-100, 0-500 uA. (Res. 900 ohms). **Price $6.75.**

MO65 METERS: New. Face size 3½-in., M/H 2¾-in. Res. 120 ohms. 0-1, 0-5, 0-10, 0-20, 0-50, 0-100, 0-500 mA. **Price $5.25** nett. Post. 20c.

MO65 METERS RES.: 0-15, 0-30, 0-300 volt DC. **Price $5.40** nett. Postage 20c.

SWR 109 METER: Replacement. **Price $9.50**. Postage 20c.

P25 "S" METER: Price $6.50 nett.

P25 METERS: New. Face size 2½-in., M/H 2¼-in. Res. 60 ohms. 0-1, 0-5, 0-50, 0-100, 0-500 mA. **Price $6.00** nett. Postage 20c.

MR3P METERS: New. Face size 3½-in., M/H 2¾-in. Res. 120 ohms. 0-1, 0-10, 0-50, 0-100, 0-500 mA. **Price $6.75** nett. Postage 20c.

MR3P METERS: 0-50, 50-50, 0-100, 0-500 uA. **Price $9.20** nett. Postage 20c.

MASTER METERS: New. Model S21. Size 2¼-in., M/H 2-in. C/R 50-50 uA. Plain face. **Price $4.00** nett. Postage 20c.

MASTER METERS: New. Model S212 24F/498. Face size 3⅛-in., M/H 2¾-in. C/R 1-1 mA. Plain face. **Price $3.70** nett. Postage 20c.

MASTER METERS: New. Model 212 24F/502. 0-10 volt AC. Face size 3⅛-in., M/H 2¾-in. **Price $4.50** nett. Postage 20c.

GREEN CAP CONDENSERS

Sizes: 0.001, 0.0022, 0.0033, 0.0047, 0.0056, 0.0068, 0.0082 uF. **Price 12c each.**

Sizes: 0.01, 0.022, 0.033, 0.039, 0.047, 0.056, 0.082 uF. **Price 15c each.**

Sizes: 0.1, 0.22, 0.33, 0.39, 0.47 uF. **Price 18c each.**

1 uF. (200v.w.), 2 uF. (200v.w.). **Price 58c each.**

BARGAIN ITEMS

Mini push-button Switches, new, 45c each.
Belling-Lee Sockets, 40c each.
Belling-Lee Plugs, 45c each.
Belling-Lee Line Joiners 48c each.
Spring-loaded Terminal Posts, yellow, green, red or black, 15c each.
3.5 mm. Plugs, 25c each.
2.5 mm. Plugs, 15c each.
6.6 mm. Plugs, 40c each.
Stereo Plugs, 60c each; Stereo Sockets, 50c each.
R.C.A. Plugs, 50c each.
4-pin Speaker Plugs, 22c pair.
3-pin Dim. Plugs, 58c each.
SO239 Sockets, 95c each.
PL259 Plugs, $1.00 each.
Ladel Crystal Mike, $1.20 each.
TV Plug/Socket, 45c pair.
Jabel Crystal Sets Coil, new, 95c each.
Jabel Aligning Tool Kits, set of two, 85c.
Jabel Aligning Tool Kits, set of 4, $1.30.
Adel Nibbling Tools, $7.50 each.
Car Radio Speaker Control and volume front and rear, $3.00 each.
Neon Screwdriver, 240 volt, 55c each.
10 pairs S/A Clips, $1.60.
Ditto with 6-inch lead (ideal jumper leads), $1.60.
3.5-3.5 3-ft. leads, $1.20.
Jabel Rotary Switches, $1.20. 1 pole, 12 positions, 2-4, 2-5, 2-6, 3-3, 4-2.
581 Eddystone Variable Condensers, 50 pF. (no shaft), $1.50.

DISC CERAMIC CONDENSERS

25 volt working

Sizes: 0.1, 0.22, 0.27, 0.33, 0.01, 0.022, 0.0047, 0.033, 0.047 uF. **Price 18c each.**

Size: 0.47 uF. **Price 44c each.**

BROADCAST BAND TUNER

Locally made, Model 401 uses a shielded 3-stage I.F. Module with a single transistor mixer-osc. An AGC voltage is developed and applied to the 1st I.F. stage. High sensitivity is obtained with a ferrite rod, 8-in. long, 3/8-in. diam. Sensitvity: 150 uV.; bandwidth: 8 KHz.; supply voltage: 9V.; supply current: 5 mA.; audio output voltage: 0.5-1.0V.; load impedance: not less than 47K. Complete in plastic box with dial. Ready to plug in. **Price $25.00** nett.

POCKET CRYSTAL RADIO

Type ER22. Set complete. **Price $1.50.**

A.C. ADAPTOR—BATTERY SAVER

Type PS64—240 volts to 6 or 9 volts, 300 mA. **$12.50**
Type PS62—240 volts to 6 or 9 volts, 100 mA. **$8.50**

Postage 30c

C60 CASSETTE TAPES

Price 80c each

EXTENSION SPEAKERS

Type T530 Tubular Extension Speakers, 8 ohms, new. Complete with lead and two plugs 2.5 and 3.5 mm. **Price $4.30.** Postage 20c.

TELEPHONE INTER-COM. SETS

Telephone Inter-communication Set with signal bulb, two U2 batteries. Ideal for children. **Price $6.75.** Postage 30c.

EGG INSULATORS

For your Aerial. **8c each.**

VARIABLE CONDENSERS

Single gang. 10-415 pF. **Price $2.20.**

RESISTORS

½ watt **8c each**, 1 watt **10c each.**

VERNIER DIALS

Ratio 8 to 1 reduction, scale 0-10.

Type T 501 1½ inch diameter $2.00
Type T 502 2 inch diameter $2.75
Type T 503 3 inch diameter $3.30

LOW PASS FILTERS

A "Cabena" Low Pass Filter will fix T.V.I. Cut-off frequency, 30 MHz.; attenuation at 60 MHz. better than 30 dB.; insertion loss, negligible. Impedance 50-72 ohms.

Price $11.50. Postage 10c.

SOLID STATE STEREO AMPLIFIER

8 watts r.m.s. per channel. Input for magnetic, crystal and ceramic type microphone. P.V. cartridges, tape recorder input and output, tuner input, stereo headphone jack.

Reduced to $55.00. Postage $1.20.

FIVE-CORE CABLE

5 x 5/0076. Ideal for Intercoms., Telephones, etc. New. **100 yd. rolls, $17** (postage 75c), or **20c yd.**

STEREO HEADPHONES

Professional quality (well known brand). Large earpads, standard stereo plug, 6 ft. lead.

Price $5.75. Postage 50c.

CRYSTAL CALIBRATOR No. 10

Nominal range: 500 KHz. to 30 MHz. 500 KHz. xtal and 250 KHz./500 KHz. BFO. Provides heterodyne output in steps of 1 MHz. Dial driven by machine cut strip gears, calibrated in 2 KHz. div. Easily read to 250 cycles. Output "spiked" approx. 1 sec. intervals, identifies beat note. Power requirements: 12v. DC at 0.3 amp., 250 volts at 15 mA. This is a precision instrument. Complete with crystal.

Price $23.50

HAM RADIO SUPPLIERS

323 ELIZABETH STREET, MELBOURNE, VIC., 3000

Phones: 67-7329, 67-4286 All Mail to be addressed to above address

Our Disposals Store at 104 HIGHETT ST., RICHMOND (Phone 42-8136) is open Mondays to Fridays, 10.30 a.m. to 5.0 p.m., and on Saturdays to midday.

We sell and recommend Leader Test Equipment, Pioneer Stereo Equipment and Speakers, Hitachi Radio Valves and Transistor Radios, Kew Brand Meters, A. & R. Transformers and Transistor Power Supplies, Ducon Condensers, Welwyn Resistors, etc.

amateur radio

JOURNAL OF THE WIRELESS INSTITUTE OF AUSTRALIA. FOUNDED 1910

APRIL, 1971
Vol. 39, No. 4

Publishers:
VICTORIAN DIVISION W.I.A.
Reg. Office: 478 Victoria Parade, East Melbourne, Vic., 3002.

Editor:
K. E. PINCOTT VK3AFJ

Publications Committee:
R. Dorin VK3ZU
Ken Gillespie VK3GK
Harold Hepburn (Secretary) VK3AFQ
Peter Ramsay VK3ZWN
W. E. J. Roper VK3ARZ

Circulation—
Jack Kelly VK3AFD

Draughtsmen:—
Clem Allan VK3ZIV
John Blanch VK3ZQL
John Whitehead VK3YAC

Enquiries:
Mrs. BELLAIRS, Phone 41-3535, 478 Victoria Parade, East Melbourne, Vic., 3002. Hours: 10 a.m. to 3 p.m. only.

Advertising Representatives:
TECHNICAL NEWS PUBLICATIONS
21 Smith St., Fitzroy, Vic., 3065. Tel. 41-4962.
P.O. Box 108, Fitzroy, Vic., 3065.

Advertisement material should be sent direct to the printers by the **first of each month.**

Hamads should be addressed to the Editor.

Printers:
"RICHMOND CHRONICLE," Phone 42-2419.
Shakespeare Street, Richmond, Vic., 3121.

★

All matters pertaining to "A.R." other than advertising and subscriptions, should be addressed to:

THE EDITOR,
"AMATEUR RADIO,"
P.O. BOX 36,
EAST MELBOURNE, VIC., 3002.

★

Members of the W.I.A. should refer all enquiries regarding delivery of "A.R." direct to their Divisional Secretary and not to "A.R." direct. Two months' notice is required before a change of mailing address can be effected. Readers should note that any change in the address of their transmitting station must, by P.M.G. regulation, be notified to the P.M.G. in the State of residence; in addition, "A.R." should also be notified. A convenient form is provided in the "Call Book".

CONTENTS

Page

Technical Articles:—

A Transistorised Carphone, Part Two—Transmitter 5
Errata—Part One 16
A 20W. 576 MHz. Varactor Multiplier Transmitter 9
Practical VXO Design 12
The Decibel and Decibels V. % Distortion—Lecture No. 11 .. 8

General:—

Book Review: Single Sideband for the Radio Amateur 17
Cook Bi-Centenary Award 20
DX News 13
Expedition to Laccadive Group of Islands 13
Federal Comment 4
Federal Repeater Secretariat 17
From the W.I.A. Novice Investigation Committee 17
Licensed Amateurs in VK 19
New Call Signs 19
New Equipment: Yaesu FT101 Solid State Transceiver 17
Overseas Magazine Review 14
Some N.Z.A.R.T. Awards 16
The Brisbane DX Club Award 16
The Pretoria Award 16
VHF 18
W.I.A. D.X.C.C. 20
W.I.A. V.H.F.C.C. 15
70th Anniversary of Old "CC" to be observed by W1SS 11

Contests:—

Winter V.H.F. and U.H.F. Contest 11

COVER STORY

The latest piece of equipment from the Yaesu Musen Co. Ltd. of Japan is their model FT-2F fully solid state 12-channel 144 MHz. FM Transceiver. Of compact dimensions, 6⅝" w. x 2½" h. x 10" d., and light weight of 4 lbs., it is ideally suited to "personal portable" operation as well as mobile or base station use. It can be powered from a 12v. DC source such as car battery, portable battery pack, or from the matching FP-2 AC power supply. Details from the Australian Agent, Bail Electronic Services, Melbourne.

WAYNE COMMUNICATION ELECTRONICS

Catering specially for the Amateur with Components, Receivers, Transmitters, Test Equipment. Everything from Resistors to 100 MHz. Frequency Counters

ALL AT UNBEATABLE PRICES

- **COLLINS ART13 AUTO-TUNE TRANSMITTER.** 2 - 18.1 MHz. AM or CW. 813 PA, 2 x 811 Modulators. Complete with all tubes. In good condition. **$30 each.** Freight forward.
- **COMPUTER BOARDS.** Removed from functional equipment. Contain 4 VHF transistors, 12 high speed switching diodes, 2% metal oxide resistors. **$1.50 each.**
- **CERAMIC 1625 SOCKETS.** Suit also 3AP1 CRO tube. **15c each.**
- **POWER SUPPLIES.** 230v. 50 Hz. input, 300v. 100 mA. DC output. Manufactured by A & R. Brand new. **$10 each.**
- **WIRE WOUND RESISTORS.** Range: 1.8 to 620 ohms. 6 watt. New. **5c each.**
- **SPECIAL! TRANSFORMERS:** Primary 230v. 50 Hz., Secondary 27v. 3 amp. This month only. **$3.00 each.**

All items plus pack and post.

Come and inspect the full range of equipment and components at

WAYNE COMMUNICATION ELECTRONICS

757 GLENFERRIE ROAD, HAWTHORN, VIC., 3122 **Phone 81-2818**

BRIGHT STAR CRYSTALS

FOR ACCURACY, STABILITY, ACTIVITY AND OUTPUT

SPECIAL OFFER–

STANDARD AMATEUR CRYSTALS

STYLE HC6U HOLDER, FREQUENCY RANGE 6 TO 15 MHz.

0.01% $4.25

0.005% $5.50

Prices include Sales Tax and Postage

COMMERCIAL CRYSTALS

IN HC6U HOLDER, 0.005% TOLERANCE, FREQUENCY RANGE 6 TO 15 MHz.

$6.00 plus Sales Tax and Postage

Write for list of other tolerances and frequencies available.

COMPREHENSIVE PRICE LIST NOW AVAILABLE—WRITE FOR YOUR COPY

New Zealand Representatives: Messrs. Carrell & Carrell, Box 2102, Auckland

Contractors to Federal and State Government Departments

BRIGHT STAR CRYSTALS PTY. LTD.

LOT 6, EILEEN ROAD, CLAYTON, VIC., 3168 **Phone 546-5076**

With the co-operation of our overseas associates our crystal manufacturing methods are the latest

DURALUMIN ALUMINIUM ALLOY TUBING

IDEAL FOR BEAM AERIALS AND T.V.

★ **LIGHT** ★ **STRONG**

★ **NON-CORROSIVE**

Stocks now available for Immediate Delivery

ALL DIAMETERS — ¼" TO 3"

Price List on Request

STOCKISTS OF SHEETS— ALL SIZES AND GAUGES

GUNNERSEN ALLEN METALS

PTY. LTD.

SALMON STREET, PORT MELB'NE, VIC.
Phone 64-3351 (10 lines)
T'grams: "Metals" Melb.

HANSON ROAD, WINGFIELD, S.A.
Phone 45-6021 (4 lines)
T'grams: "Metals" Adel.

SIDEBAND ELECTRONICS ENGINEERING

YAESU MUSEN:

FT-DX-400 Transceiver, with PTT microphone, still only $545
FT-200 Transceiver with power supply components kit $380
FT-200 Transceiver with AC supply-speaker unit and PTT mike $410
FL-DX-2000 Linear $225. FL-2000-B Linear with 572Bs $350
SP-400 Speaker for FT-DX-400 $22. FF-50-DX TVI Filter $17.50
FL-DX-400 Transmitter with PTT table microphone $375

HY-GAIN:

TH6DXX 6 element tri-band Master Beam $220
HY-QUAD tri-band Cubical Quad with gamma matches for single co-ax. feedline $130
14AVQ four-band Vertical, 10 to 40 metres $52

MOSLEY: TA33JR 3 element tri-band Junior Beam $105

MUSTANG: 3 element tri-band Beam for up to 1 kw. power, comparable to the Hy-Gain TH3Mk3 .... $130

NEWTRONICS: 4-BTV four-band Vertical, 10 to 40 metres $60

MOBILE WHIPS AND MOUNTS:

Webster Bandspanner, Mark Helical Whips $55
Swivel body-mount and spring .... per set $10

DIGITAL CLOCKS: 24-hour, date and day of the week $25

OMEGA Antenna Noise Bridges, few left for only $25

CRYSTALS:

FT-241 type, 375 to 515 KHz., per box of 80 crystals $15
Sets of six matched FT-241 Crystals, including matched BFO or Carrier Crystals, 375 to 450 and 465 to 515 KHz. .... per set $7.50

BALUNS: Locally made, electrical copy of the Hy-Gain BN-86 .... $12.50

FILTERS: Kokusai mechanical type 455 KHz., 500 cycles for CW $20

MIDLAND PRODUCTS:

Type 13-710 one-watt Transceivers, now on 27.240 or 27.880 MHz., also crystals for 27.085 MHz. available; 3 channels, call signal, excellent for CW operation, with eight penlite batteries, earphone, carrying case, audio squelch control, battery voltage meter, each still only $37.50

Type 23-135B Field Strength Meter, with five ranges, tunable from 1 to 300 MHz., with telescoping whip $10

Type 23-136 SWR - Power Meter, dual meters 100 micro-amp., very sensitive for low power but good for 1 kw. maximum, up to 175 MHz., reads forward and reflected power simultaneously, 52 ohm impedance $20

Type 23-126 SWR Meter, standard single meter type, 52 ohm impedance, with whip for field strength metering $12

PTT Dynamic Hand Microphone, steel case, 50K ohm impedance, excellent voice quality, no rocking armature type, with coiled cord and mobile use clip $10

Table Model Dynamic Microphone, with PTT bar or lock switch, 50K ohm impedance, a quality bargain at $15

Same Table Microphone with built-in two-stage pre-amplifier, adjustable for up to 50 dB. amplification $25

Co-ax Connectors, Midland types PL-259, SO-239 females with or without flanges, PL-258 double-ended female; per conn. each $0.75

Co-ax Inserts for PL-259 for thinner co-ax. cable .... each $0.20

Expected soon—Midland 5-watt Base Station Transceivers, eight-channels, 240v. AC, fully P.M.G. approved for 27.880 MHz. operation, with S meter and power-output metering, including PTT microphone, with switch to be used as 3-watt public address amplifier into separate speaker(s). Target price, all inclusive, only $100

Still a few **NATIONAL** brand-new **Transformers** and **Chokes** left.

All prices quoted are net, cash with order, Springwood, N.S.W., subject to alteration without prior notice, sales tax included in all cases. Postage, freight and insurance are extras, and transformers are heavy!

SIDEBAND ELECTRONICS ENGINEERING

Proprietor: ARIE BLES

Telephone: **Springwood** (STD 047) 511-394,
not part of the Sydney telephone exchange

P.O. BOX 23, SPRINGWOOD, N.S.W., 2777

TRIMAX for a complete transformer range!

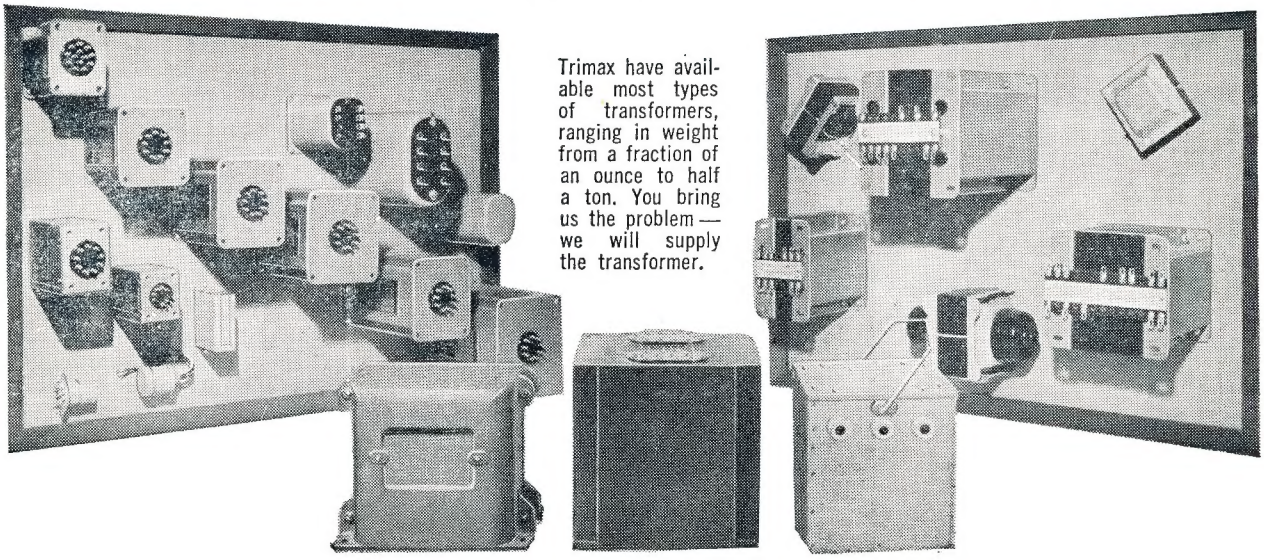

Trimax have available most types of transformers, ranging in weight from a fraction of an ounce to half a ton. You bring us the problem — we will supply the transformer.

L M ERICSSON PTY. LTD.

"TRIMAX" DIVISION

FACTORY: CNR. WILLIAMS RD. & CHARLES ST., NORTH COBURG, VICTORIA. 'PHONE: 35-1203 . . . TELEGRAPHIC ADDRESS: "TRIMAX" MELB.

LM 51

FEDERAL COMMENT

In the January issue I wrote about the Federal Executive's problems revolving round the near impossible situation facing the many honorary officers administering the organisation and this magazine. I gave a brief outline of the facts which brought about the decision to employ a Secretary/Manager. In that same issue there appeared an advertisement for filling this post.

I am very pleased to tell you that the post has now been filled following upon interviews with candidates on a short list selected from all the applications which were received. The successful candidate happened to be in Australia at the time when the post was advertised and it is our good fortune that his services are now available to us.

He is 53-year-old PETER B. DODD, VK6/5/3/1/2CIF, better known perhaps as a past DXer with such call signs as VQ4PBD, VQ5PBD, VQ1PBD, 5H3PBD, 7Q7PBD, G3PBD and many others dating back to 1946 and to pre-war as a listener. He has also operated for a short time as ZL1BDC portable/mobile s.s.b. from a motor caravan in which he and his family travelled overland from Europe. On this safari he operated 4U1ITU and held calls as OE1ZBW and YA1PBD.

In addition to being reasonably well known on the DX bands, he is a Life Vice-President of the Radio Society of East Africa. He served on the Council of that Society, organised Amateur Radio familiarisation exercises for the benefit of local Ministers of at least two African governments, was closely involved with the establishment and progress of the East African Emergency Network allied with communications for the world-renowned annual East African Safari and, when not resident in Mairobi, the Society's headquarters, reminded them that there were such people as country members. I gather from another source that he was awarded a medal by the Belgian Government for work done during the Congo crisis.

On the general administrating side, Peter Dodd had come up through the ranks of Customs and Excise in East Africa, culminating as Head of the Department in Malawi where he was responsible for establishing it in that country. For a period he was a Director of an Amateur equipment manufacturing company in the U.K. The Selection Committee were satisfied that he would bring to the position almost unique experience with impartial detachment, a wealth of administrative ability and a fund of enthusiasm. We wish him well.

It is fortunate too that we will possess someone capable of effecting a smooth transition from the existing to the new Constitution of the W.I.A. which is mentioned in my Report, to be published in "A.R.," to be considered at the Federal Convention in Brisbane this month. No doubt your Federal Councillor will have informed you about the various motions which are to be debated at this Convention.

However, it is thought that the Convention will give more time in considering the precise plans which will be necessary to effect the change-over to the new W.I.A. Constitution, the I.A.R.U. Region 3 Conference in Tokyo and the I.T.U. World Administrative Radio Conference in Geneva later in the year. I ask you to read these references with care and to observe the work being done on behalf of all Amateurs in this part of the globe.

Once again I seek your support by continuing your interest and by each one of you recruiting at least one more member this year.

MICHAEL OWEN, VK3KI,
Federal President, W.I.A.

A Transistorised Carphone

PART TWO—TRANSMITTER

By L. B. JENKINS,† VK3ZBJ, and H. L. HEPBURN,‡ VK3AFQ

The authors continue this second part of the article with a description of the transmitter and associated circuits. From correspondence received, it appears that boards, diagrams and/or kits of this Carphone will be in demand. Accordingly, work is proceeding along these lines.

The transmitter can conveniently be dealt with in three parts—the exciter/modulator, the driver stage, and the final power amplifier. This grouping is chosen since each module represents a physically separate entity with each module on a separate circuit board. The exciter/modulator is on a p.c.b. 7" x 2", while both driver and p.a. stages are each on boards 3½" x 2".

It must be stated right at the outset that the transmitter is a frequency modulated device and not (as are the popular Vintens, A.W.A's and T.C.A's) a phase modulated system. The decision to use f.m. rather than p.m. was based mainly on circuit simplicity and ease of adjustment.

Briefly, the main difference between the two methods is that with f.m. the amount of deviation is proportional only to the level of audio drive and is independent of the modulating frequency. With p.m. on the other hand, the amount of deviation is proportional not only to the audio level, but also the frequency of the modulating signal, the higher the modulating frequency the greater the amount of deviation. Thus in a p.m. system it is necessary in the transmitter to reduce the audio drive as the modulating frequency increases (de-emphasis) and in the associated receiver to increase the audio "highs" to compensate (pre-emphasis). The amounts of pre-emphasis and de-emphasis used in surplus commercial units varies from make to make.

In order that the transmitter now described be compatible with the wide variety of transceivers in Amateur use, it has been necessary to provide some audio shaping in the modulator. Since this shaping has been done with only two fixed resistors and two fixed capacitors and since these can be altered to taste, obtaining audio compatibility presents no problem.

THE EXCITER/MODULATOR

Fig. 6 gives the circuit diagram of the complete exciter. It uses three bipolar transistors in the audio section, a bipolar oscillator and three protected dual gate MOSFETs as multipliers. These latter devices are quite new on the Australian scene and can best be described as higher dissipation, epoxy packaged 3N140s, but without the problems of static destruction associated with the latter device. They can be handled and soldered into place with no more care than the normal run of transistors.

The MPF121s have been used in this design on two grounds. Firstly, they are the same price as the type of bipolar transistor used to date in multiplier service (2N3564, 2N3565, BF115, etc.), but more importantly they are to be preferred in view of the almost perfect waveform purity that can be obtained. Those who have had experience with bipolars as frequency multipliers will be aware of the difficulties of obtaining a sub harmonic and spurious-free waveform from them.

Input from a medium impedance dynamic or rocking armature micro-

† 54 Tennyson Street, Highett, Vic., 3190.
‡ 4 Elizabeth Street, East Brighton, Vic., 3187.

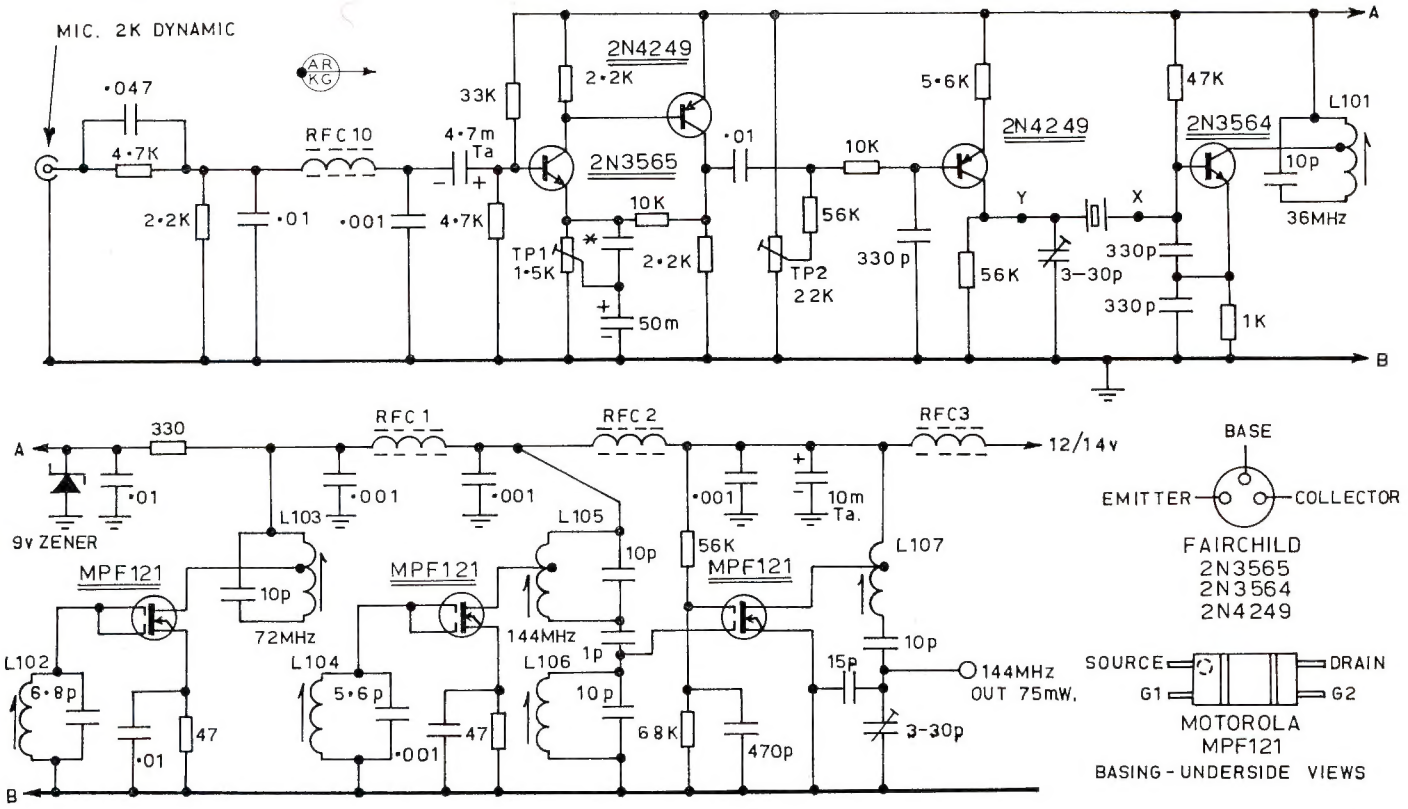

FIG. 6. 2 METRE F.M. EXCITER

* May be needed to adjust frequency response.

phone (a Zephyr 25E 2,000 ohm p.t.t. is standard in both authors' equipment and is thoroughly recommended) is shaped by the 0.047 μF./4.7K ohms and 0.1 μF./2.2K ohms combinations. If any other microphone is used, or if a different audio characteristic is required then some adjustment to these values will be needed. RFC10, which consists of a single wire through a Neosid F29 tuning slug, and the associated 1,000 pF. capacitor decouple the base of the 2N3565 for r.f.

The 2N3565/2N4249 bipolar combination provides ample audio gain, this gain being adjustable through TP1 (1.5K) which acts as a deviation control. Audio is applied to the base of the 2N4249 modulator bipolar whose base d.c. voltage is adjustable by means of TP2 (22K). This variable resistor allows control over both frequency and speech linearity.

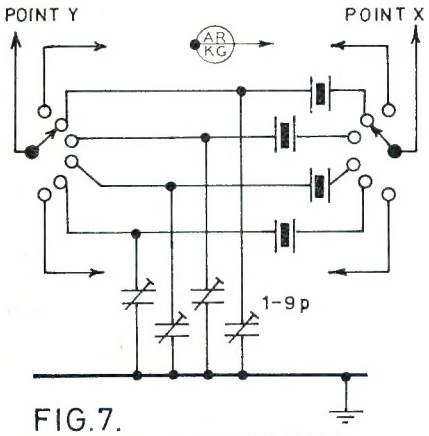

FIG.7.
CRYSTAL SWITCHING

The 2N4249 modulator acts in effect as a variable capacitor which is in series between the crystal and ground. Any variation of the voltage on the base of the modulator (no matter whether it be d.c. or audio) varies the capacity in series with the crystal which, in turn, varies the frequency of oscillation. For accurate setting of centre frequency and reliable operation it is essential that the crystal have a low equivalent series resistance.

It may be worth noting at this point that if the f.m. modulator bipolar is omitted and the crystal grounded through, say, 30 pF., then the r.f. generating side of things can be used to drive an a.m. final while the 2N3565/2N4249 combination can be used as a microphone pre-amplifier.

The oscillator uses crystals in the 12 MHz. range, the exact frequency being obtained by dividing the required output frequency by twelve.

Fig. 7 gives the circuitry used for multi-channel operation, each crystal having its own trimmer for frequency adjustment. The trimmers recommended are the 1 to 9 pF. Shinmei types sold through the VK3 W.I.A. components facility. These trimmers are also used in the driver stage of the transmitter.

Output from the oscillator at 36 MHz. is transferred by means of the mutually coupled pair L101/L102 to the paralleled gates of the first MPF121 doubler. Output from this stage on 72 MHz. goes through the second mutually coupled pair L103/L104 to the paralleled gates of the second MPF121 doubler. Again a pair of coils is used to transfer the 144 MHz. output to the third MPF121. Some capacitive top coupling is used in this case. The third MPF121 is used as an amplifier and has about 7 volts applied to its second gate. A series tuned circuit in the drain uses a capacitive divider to give a 50 ohm output impedance. The trimmer at the bottom of this divider is a standard Philips 3-30 pF. unit.

Setting up of the Unit

This is simple but does require some form of output indicator, a milliammeter, and an absorption wavemeter/g.d.o. covering 30 to 80 MHz. A circuit of a suitable output indicator is given in Fig. 10. It consists of a 47 ohm load resistor, a germanium diode such as an OA91 and a voltmeter. Assuming an output of 100 mW. from the exciter, the rectified d.c. will be about 2¼ volts. If the indicator is used to set up the driver and p.a. stages then voltages of respectively 7-8 and 20-25 will be encountered.

A carbon resistor must be used and not a wire wound one. A one watt resistor is suitable for the exciter (and even possibly for the driver), but the best overall solution is to parallel ten 470 ohm one watt resistors to give a power handling capacity of ten watts. The indicator can then be used for the p.a. as well. Keep all connections as short as possible.

Bear in mind that the above indicator is just that. If a proper measuring power meter is required then a kit of parts for a fully shielded, two range (0-5 and 0-50 watts) power meter put out by Horwood Electronics in Melbourne is recommended. They can also be purchased fully made up and tested from Radio Parts Pty. Ltd. in Melbourne.

The commissioning procedure is as follows. Set the deviation control (TP1) to minimum, i.e. with the slider earthed. Put a dummy load across the output of the exciter. This load may consist simply of a 47 ohm resistor, or the indicator described or a proper 50 ohm power meter. Apply 12 volts through a 0-250 mA. meter. Set TP2 so that the voltage between the collector of the 2N4249 modulator transistor and earth is about 5 volts. TP2 should be about the middle of its range. At this stage the current drawn should be around 20 mA. and the oscillator may or may not be going.

Couple an absorption wavemeter (or g.d.o. in the wavemeter position) to the oscillator collector coil L101 and adjust its core until output on 36 MHz. is obtained. Then set the wavemeter to 72 MHz., couple it to L103 and adjust the cores of L102 and L103 for maximum output. Note that as each of the cores is adjusted, and as output comes up, the total current drawn will increase, each of the MPF121 stages pulling some 20-25 mA. as it comes on to resonance.

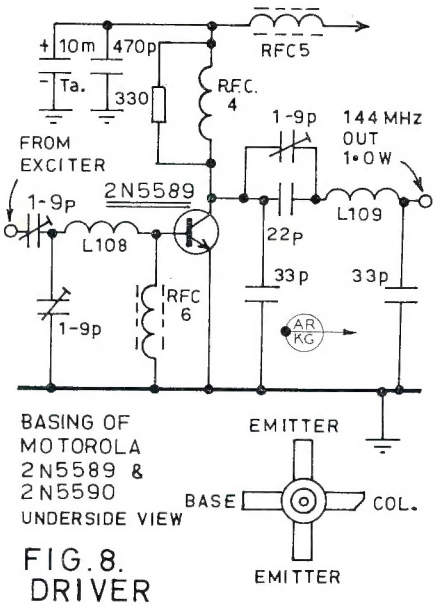

FIG.8.
DRIVER

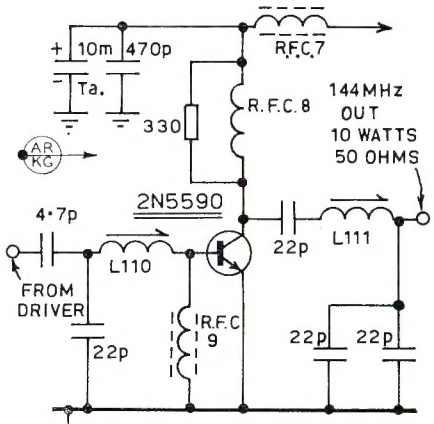

FIG.9. P. A.

Now set the 3-30 pF. output trimmer to about ¼" mesh and adjust the cores of L105, L106, L107 and the output trimmer until some indication of output from the exciter is seen. At this stage go back over all the coils and adjust their cores for maximum indicated output. When on tune, at least 75 mW. at 146 MHz. should be available.

Using a receiver on the appropriate channel as a monitor, the modulator may now be adjusted. Set TP1 to full open (slider at the emitter end), connect the appropriate microphone and, while speaking into the microphone, adjust TP2 for the most intelligible speech in the monitor. Frequency can then be set using the crystal trimmer by zero beating against a station known to be on the correct frequency. The unit may then be put to air for final adjustments to TP1 for deviation, TP2 for speech linearity and the crystal trimmer for frequency, bearing in mind that the last two adjustments interact.

THE DRIVER STAGE

The driver stage uses a Motorola 2N5589 (MM1601) to raise the power level to 1-1½ watts. Fig. 8 gives the appropriate circuit diagram.

Input from the exciter at 50 ohms is matched to the transistor base by the two 1-9 pF. trimmers and L108, while the output impedance is brought up to 50 ohms by means of L109 and its associated capacitors.

A low value resistor is used across the collector choke to reduce Q and inhibit parasitic oscillation. The h.t. supply is decoupled by means of RFC5 and the 470 pF./10 μF. combination.

RFC6 at the base of the transistor consists of a single wire running through a half-inch length of ferrite rod which has high losses at the frequency of operation. Use of high frequency material such as the Neosid F29 slugs used as decoupling devices elsewhere in the design is to be avoided. In the absence of suitable ferrite, a ⅛ watt 47 ohm resistor can be substituted with only a small drop in overall efficiency.

The 470 pF. h.t. decoupling capacitor is a normal disc ceramic and the 10 μF. a tantalum, but all other capacitors in the signal circuits are Philips ceramic beads. The trimmers are the Shinmei type previously mentioned.

Setting up is relatively simple. A 50 ohm dummy load is connected to the output and all variable capacitors set to full capacity. Drive is applied from the exciter together with an initial h.t. of 3-4 volts fed in through a 0-500 mA. meter. The input (series) trimmer is reduced in capacity until the current drain begins to rise and output is indicated. All three capacitors are then adjusted for maximum output. The h.t. is then raised to, say, 9 volts and the trimmers adjusted for maximum output. Finally, full h.t. is applied and again the three trimmers adjusted for maximum output.

Note that at full h.t. the 1-9 pF. trimmer between L108 and earth should be between half and full capacity, while the series trimmer should be between half and zero capacity. The current drawn by the driver stage alone should be about 250 mA. Currents grossly in excess of this are an indication either of mistuning or of parasitic oscillation. Power output should be at least 1½ watts.

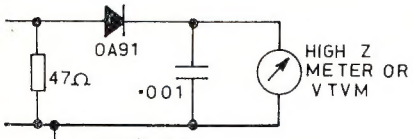

FIG.10. OUTPUT INDICATOR

THE OUTPUT STAGE

A Motorola 2N5590 (MM1602) is used to raise the output power to the 10 watt level. Note that this is r.f. power output and not d.c. power input.

In most respects the p.a. stage is a copy of the driver stage except that it uses fixed capacities and variable inductance rather than the other way round. All the capacitors except the 470 pF./10 μF. tantalum are Philips beads and two are paralleled at the output to increase the power handling capacity. Note that the normal disc ceramics are not intended to carry large r.f. currents and, if used, will run hot or blow. The "lossy" ferrite RFC technique is again used in the base of the transistor.

Tune up follows the same lines as the driver. The cores of L110 and L111 are set full in, a 50 ohm load connected, drive is applied and a low level of h.t. fed in through a 0-2 amp. meter. The cores of the two coils are adjusted for maximum output. H.t. is then raised in two or three steps to maximum, at each step the coil slugs being adjusted for maximum output consistent with the lowest collector current drain. If, at any time, the collector current rises at a more rapid rate than the r.f. output is rising, then it is possible that the stage is breaking into oscillation or is being mistuned. As a guide, at 10 watts r.f. output and a 13.5 volt rail, the p.a. should draw no more than 1 amp.

COIL DATA

L101—20 turns 26 B. & S. enam., tapped 6 turns, close wound on Neosid 722/1 former, F29 slug.

L102—20 turns 26 B. & S. enam., close wound on Neosid 722/1 former, F29 slug.

L103—10 turns 23 B. & S. enam., tapped 3 turns, close wound on Neosid 722/1 former, F29 slug.

L104—10 turns 23 B. & S. enam., close wound on Neosid 722/1 former, F29 slug.

L105—4¾ turns 18 B. & S. tinned copper, spaced ⅜", tapped 2 turns, on Neosid 722/1 former, F29 slug.

L106—4¾ turns, 18 B. & S. tinned copper, spaced ⅜", on Neosid 722/1 former, F29 slug.

L107—5¼ turns 18 B. & S. tinned copper, spaced ⅜", tapped 2½ turns, on Neosid 722/1 former, F29 slug.

L108 (driver)—4 turns 18 B. & S. tinned copper, air cored, 5/16" i.d., spaced ⅜".

L109 (driver)—5 turns 18 B. & S. tinned copper, air cored, 5/16" i.d., spaced ½".

L110 (p.a.)—1¾ turns 18 B. & S. tinned copper, spaced ⅜", on Neosid 722/1 former, F29 slug.

L111 (p.a.)—3¾ turns 18 B. & S. tinned copper, spaced ⅜", on Neosid 722/1 former, F29 slug.

RFC1, 2, 3, 5, 7, 10—Single wire through F29 slug.

RFC4—6 turns 23 B. & S. enam., close wound on ⅛" i.d., air cored, ¼" long.

RFC6—Single wire through ferrite rod ½" long (or 47 ohm resistor).

RFC8—3 turns 18 B. & S. tinned copper, ⅛" i.d., spaced to occupy ¼" length.

RFC9—Single wire through ferrite rod ½" long (or 33 ohm resistor).

GENERAL

While the designs presented for both the receiver and transmitter are well up with the current state of the art, they are not so far "out" that they are impractical to build because the key components are unobtainable. The two key components in this case are the Toyo 10M-2A-1 filter which is marketed in Australia by Arbor Pty. Ltd., of 282 Bell Street, Coburg, Vic., and the AWM1272 and 1306 which can be obtained from A.W.V. in Sydney. The 455 KHz. i.f. transformers used are "Rapar 6" replacement transformers from Radio Parts Pty. Ltd. in Melbourne (who also stock the Fairchild transistors), while all the Motorola devices (MPF121, 2N5589/90, and the MC1454) are from Total Electronics of 239 Bay Street, Brighton, Vic., 3186. All other "bits" are normal components held by the VK3 W.I.A. new components service at P.O. Box 65, Mt. Waverley, Vic.

At the end of Part One it was stated that boards, diagrams and/or kits would be made available if required. From subsequent correspondence it appears that such requirement exists and, accordingly, work is proceeding to do this. Further details can be obtained from either of the authors.

In conclusion there are a couple of points that may be of interest. It was stated earlier in this article that the MPF121s had been used because of their ability to give excellent waveform. The complete transmitter, running 10 watts into a dummy load, when checked with a Philips v.h.f. sampling c.r.o. showed no sign of sub harmonic content and an excellent waveform, indicating minimal higher order harmonics. Secondly, it should be noted that the driver and p.a. transistors are rated for infinite s.w.r., i.e. they should work into an open circuit or a short circuit. Whilst most definitely not recommended as normal operating procedure, such a specification does much to reduce fears of catastrophic failure of relatively expensive devices due to accidental short or open output conditions.

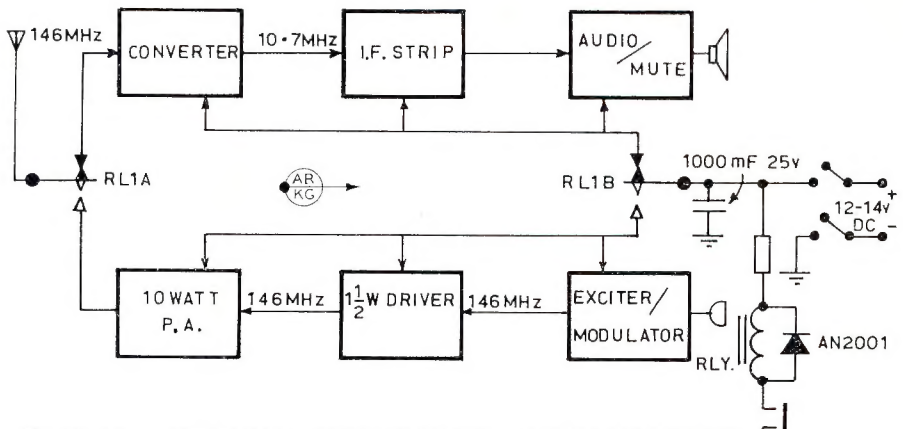

FIG. 11. GENERAL SCHEMATIC of TRANSCEIVER

THE DECIBEL AND DECIBELS V. % DISTORTION

LECTURE NO. 11

C. A. CULLINAN,* VK3AXU

THE DECIBEL

In communications systems it is convenient when making measurements or calculations to express the RATIO between any two amounts of electric or acoustic power in units on a logarithmetic scale.

The DECIBEL (1/10th of the BEL) on the Briggs (Base 10) scale is in almost universal use, although sometimes the NEPER on the Naperian base-e-scale is used.

Because voltage and current are related to power by impedance, both the decibel and the neper can be used to express voltage and current ratios, provided care is taken to account for the impedances associated with them.

In a similar manner, corresponding acoustical powers may be compared.

It must be understood, thoroughly, that both the decibel and the neper are RATIOS and have no meaning unless a reference is stated. For instance, it makes sense if we state that the ratio of one thing to another is 10 to 1, but it is meaningless if we simply state that the ratio is 10, because we no longer have a reference.

In radio work the decibel is used almost exclusively to express ratios and in dealing with Audio Frequency power it is almost universal to use a reference level of 1 milliwatt power in 600 ohms, known as 0 dbm. or zero dbm. In this context 0, or zero, does not mean nothing or nil but the transition between powers less than or greater than 1 milliwatt in 600 ohms (0 dbm.).

The number of decibels (Ndb) corresponding to the ratio between two amounts of power P_1 and P_2 is

$$\text{Ndb} = 10 \log_{10} \frac{P_1}{P_2}$$

when two voltages E_1 and E_2, or two currents I_1 and I_2, operate in the same or equal impedances,

$$\text{Ndb} = 20 \log_{10} \frac{E_1}{E_2}$$

$$\text{and Ndb} = 20 \log_{10} \frac{I_1}{I_2}$$

If E_1 and E_2, or I_1 and I_2, operate in unequal impedances,

$$\text{Ndb} = 20 \log_{10} \frac{E_1}{E_2} \pm 10 \log_{10} \frac{Z_1}{Z_2} \pm 10 \log_{10} \frac{K_1}{K_2}$$

and Ndb =

$$20 \log_{10} \frac{I_1}{I_2} + 10 \log_{10} \frac{Z_1}{Z_2} + 10 \log_{10} \frac{K_1}{K_2}$$

where Z_1 and Z_2 are the absolute magnitude of the corresponding impedances and K_1 and K_2 are the values of power factor for the respective impedances.

* 6 Adrian Street, Colac, Vic., 3250.

● Continuing the series of lectures by C. A. Cullinan, VK3AXU, at Broadcast Station 3CS for students studying for a P.M.G. Radio Operator's Certificate.

It will be seen from the above formulae that power, voltage and current ratios may be expressed logarithmically in decibels irrespective of whether the impedances are equal or unequal.

It is possible to convert decibels to nepers and vice-versa.

Multiply decibels by 0.1151 to find nepers.

Multiply nepers by 8.686 to find decibels.

DECIBELS V. % DISTORTION

In its Standards for the Technical Equipment and Operation of Medium Frequency Broadcasting Stations, second edition, 18th June, 1968, the Australian Broadcasting Control Board requires that the harmonic distortion in equipment be expressed in a percentage of the effective value of the fundamental audio frequency voltage and the harmonic voltages present in the output.

However, in recent times there has been a tendency for some authorities and manufacturers of equipment to express harmonic distortion in decibels instead of in percentage, and until one becomes familiar with this it can be very inconvenient.

Therefore a conversion table has been prepared showing the equivalent distortion for a given db. ratio covering 10% to 0.1% distortion.

The full output voltage is the reference of 0 db. = 100%.

Decibels	Distortion %	Decibels	Distortion %
—20	10.000	—41	0.8913
—21	8.913	—42	0.7943
—22	7.943	—43	0.7079
—23	7.079	—44	0.6310
—24	6.310	—45	0.5623
—25	5.623	—46	0.5012
—26	5.012	—47	0.4467
—27	4.467	—48	0.3981
—28	3.981	—49	0.3548
—29	3.548	—50	0.3162
—30	3.162	—51	0.2818
—31	2.818	—52	0.2512
—32	2.512	—53	0.2239
—33	2.239	—54	0.1995
—34	1.995	—55	0.1778
—35	1.778	—56	0.1585
—36	1.585	—57	0.1413
—37	1.413	—58	0.1259
—38	1.259	—59	0.1222
—39	1.222	—60	0.1000
—40	1.000		

SUPPORT PROJECT AUSTRALIS!

LIMITED SUPPLY OF—

GREAT CIRCLE BEARING MAPS

60c Post Free

Printed on heavy paper 20" x 30", Great Circle Map 16" diameter. Invaluable for all DXers and S.w.l's. Bearings around circumference allow precise beam headings to be made.

ALL MONEY TO GO TO "W.I.A. PROJECT AUSTRALIS"

Cheques, etc., to W.I.A., P.O. Box 67, East Melbourne, Vic., 3002

Many Maps have been sold and we would like to thank all those people who have made donations over and above the price of the Map.

Only $3.00 for a subscription to—

"BREAK-IN"

OFFICIAL JOURNAL OF N.Z.A.R.T.

Send a cheque to the—

Federal Subscription Manager, W.I.A., P.O. Box 67, East Melbourne, Vic., 3002

A 20W. 576 MHz. VARACTOR MULTIPLIER TRANSMITTER

R. J. HALLIGAN, VK3AOT/T*

After an examination of the theory of varactor frequency multiplication, two practical frequency quadruplers are presented. The first will deliver 10 watts FM/CW at an efficiency of 33%, while the second will deliver 20 watts FM/CW at an efficiency of 50%. Operation with amplitude modulated signals is also possible.

Varactor diodes are a class of semiconductor device intended for power-frequency multiplication at v.h.f. and above. Circuits are characterised by the absence of any d.c. power input, high r.f. output to r.f. input efficiencies, and simple construction. Using varactor techniques powers in excess of 300w. at 100 MHz. and 25w. at 1,000 MHz. have been obtained.

The response of varactor multiplier circuits to amplitude modulated inputs is dependent on the power level, modulation percentage and type of diode. Most designs are capable of providing results acceptable to the Amateur. Some of the more recently developed diodes have been used commercially for the frequency multiplication of television signals, an application requiring a high degree of linearity.

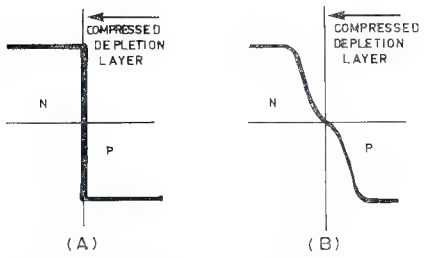

FIG.1. IMPURITY PROFILES FOR—
(A) ABRUPT JUNCTION DIODE
(B) STEP RECOVERY DIODE

Fig. 1.—Comparison of impurity profiles for abrupt junction and step recovery diodes.

* 41 Windsor Avenue, Mt. Waverley, Vic., 3149.

THEORY OF OPERATION

Abrupt Junction Varactors. — Early varactor diodes relied on the capacitance-voltage non-linearity characteristic of an abrupt P-N junction. Such a junction is the result of a constant resistivity profile in both the P and N regions. See Fig. 1. The dependence of capacitance on voltage is given by equation 1.

$$C_J = \frac{C_0}{(1 + V/\phi)^{1/2}} \quad \ldots \quad (1)$$

where C_J is the voltage dependent junction capacitance.
C_0 is the capacitance at zero bias.
V is the reverse bias voltage across the varactor.
ϕ is the contact potential, approx. 0.5 for silicon.

In order to ensure high diode 'Q' and therefore good efficiency, series resistance and therefore resistivity must be kept low. However, low resistivity results in low breakdown voltage, giving rise to significant power limitations.

There are also limitations in the response of abrupt junction varactors to amplitude modulated signals. The harmonic generation mechanism as given by equation 1 is voltage dependent, therefore the abrupt junction varactor cannot react to both high and low level signals with the same efficiency. Of greater importance is the variation of varactor capacitance with changes in signal level, leading to circuit detuning during the amplitude modulated cycle. This undesirable level mechanism causes the "switching" commonly seen with varactor multipliers. In some cases the varactor will even act as the active element of a parametric oscillator, with the input signal acting as pump source. When this occurs an unwanted discontinuity or oscillation appears on the amplitude modulated waveform.

Step-Recovery Varactors. — More modern devices are not subject to these power and linearity limitations. These devices are constructed so that the resistivity of the material peaks sharply in the vicinity of the junction (depletion region), but is low elsewhere. A typical impurity profile for this type is also shown in Fig. 1.

The effect of this construction is to reduce the dependence of junction capacitance on voltage so that this is no longer the dominant mechanism for the generation of harmonics. Instead, harmonics are generated by a pulse of reverse current resulting from the return of stored carriers. This is known as the step-recovery effect.

AVAILABLE DIODES

The table lists the characteristics of some varactor diodes which are available. Also listed are some transistors, the collector-base junctions of which can be used for varactor multiplication.

A PRACTICAL 576 MHz. QUADRUPLER

The circuit of a practical quadrupler is shown in Fig. 2. L1-C1 and L2-C2 form a simple double tuned circuit matching network at 144 MHz. Currents at that frequency are caused to flow in D1, which is effectively a capacitor. However, since this capacitance is non-linear, harmonics of 144 MHz. are produced. As is common with

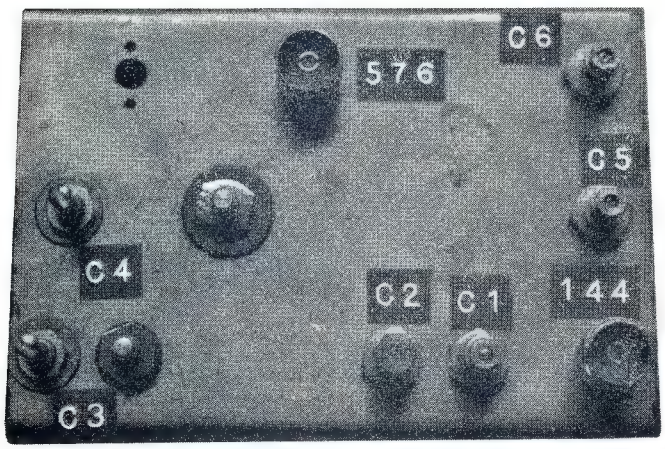

Top view of improved doubler-doubler circuit.

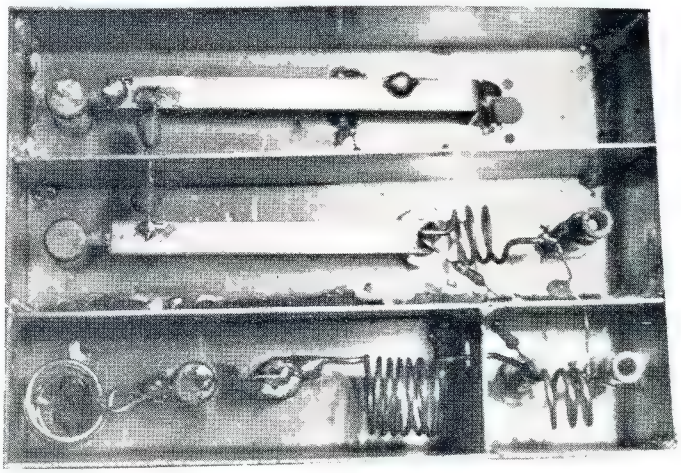

Bottom view of improved doubler-doubler circuit.

harmonic generators, the second harmonic is strongest, with subsequent harmonics progressively diminishing in amplitude. It is quite feasable to simply couple the diode to a tuned circuit at 576 MHz. and extract energy at this frequency. However, because of the small amplitude of the fourth harmonic efficiency would be low.

Efficiency can be improved by the addition of series resonant idler circuits at 288 MHz. (L3-C3) and 432 MHz. (L4-C4). These idlers re-circulate the harmonics, which are mixed with other components or multiplied within the diode, so enhancing 576 MHz. output.

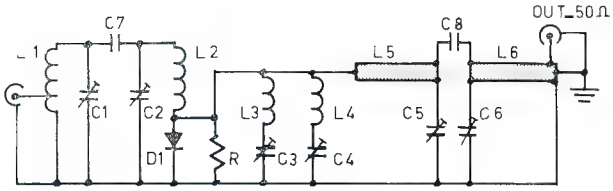

FIG. 2. 144-576 VARACTOR QUADRUPLER

L1—8 turns 18 s.w.g., ½-inch i.d., tapped 1½ turns from cold end, spaced ¾-inch.
L2—6 turns 18 s.w.g., ½-inch i.d., spaced ½-inch.
L3—3 turns 18 s.w.g., 5/16-inch i.d.
L4—1 turn 18 s.w.g., 5/16-inch i.d.
L5—3-inch x 3/16-inch 22 s.w.g. brass strip, ¾-inch above box.
L6—3⅜-inch x 3/16-inch 22 s.w.g. brass strip, ¾-inch above box.

C1 to C6—1-6 pF. glass piston or ceramic trimmers (see text).
C7—3.3 pF. ceramic (low voltage adequate).
C8—0.5 pF. ceramic (may be two 1 pF. in series).
D1—See text.
R—33K ohm ½w. (composition or carbon film) for abrupt junction diodes.

Resistor R serves to develop self-bias for the diode. While the varactor is primarily a variable capacitor for harmonic generation, it does conduct at one peak of every cycle. The subsequent d.c. current flow through R establishes a bias point for the diode.

L5-C5 and L6-C6 are resonant at 576 MHz. and attenuate undesired products. The load is tapped onto L6 at a point such as to reflect the optimum load impedance to the diode.

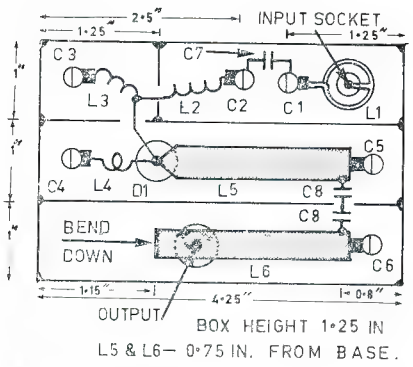

FIG. 3. UNDERNEATH LAYOUT—QUADRUPLER

Note: No dimensions are critical, however all joints must be soldered along their full length.

Construction.—The multiplier is constructed in a box of 22 s.w.g. brass, the dimensions of which are given in Fig. 3. The box is first made in the shape of a U and then partitions, coils, tuned lines and finally end plates are soldered on.

Careful consideration must be given to the type of trimmers used. Several types have been evaluated, but the only ones found satisfactory were 6 pF. glass and 8 pF. ceramic tubular types available through a U.S. disposals source.† At 40 watts input, locally available types either caught fire, seized, or shattered.

Alignment.—Connect a 2 metre transmitter of output lower than the rated dissipation of the diode used. It is often unsatisfactory to tune all adjustments for maximum output into a power meter. A better approach is to tune for maximum output at 576 MHz. using a 576 MHz. receiver or a cavity filter and power meter. Best results are achieved using a spectrum analyser.

† John Meshna, Jnr., P.O. Box 62, E. Lynn., Mass., 01904, U.S.A.

Performance.—When correctly tuned, the multiplier produced 9w. at 25% efficiency using a 2N3632 transistor collector-base junction as the varactor. Using an MA4060A, 10w. was obtained at 33% efficiency. Diodes similar to the MA4060A are available for US$5.00 from a disposals source.†

AN IMPROVED 576 MHz. VARACTOR MULTIPLIER

The circuit already described suffers from the disadvantages of difficulty of tuning and poor efficiency. Both of these problems can be overcome by the use of a doubler-doubler arrangement, using two diodes. The circuit is shown in Fig. 4.

This system takes advantage of the increased efficiency of the doubler sections. Each doubler operates at an efficiency of about 70%, giving an overall efficiency of 50%. A further advantage of this design is potentially higher power handling capability, however this could not be realised in the author's multiplier due to voltage breakdown of the piston trimmers above 40 watts input.

Further advantages are simple peak adjustment of all variable capacitors and lower spurious output. On-air tests with 10w. a.m. input revealed no detectable distortion. With 40 watts

TRIO
9R-59DS

COMMUNICATIONS RECEIVER

PRICE: FOR/FOA SYDNEY: $178.50

- 4 BANDS COVERING 540 Kcs. TO 30 Mcs.
- TWO MECHANICAL FILTERS ENSURE MAXIMUM SELECTIVITY.
- PRODUCT DETECTOR FOR S.S.B. RECEPTION.
- AUTOMATIC NOISE LIMITER.
- LARGE TUNING AND BANDSPREAD DIALS FOR ACCURATE TUNING.
- CALIBRATED ELECTRICAL BANDSPREAD.
- "S" METER AND B.F.O.
- 2 MICROVOLTS SENSITIVITY FOR 10 dB S/N RATIO.

Weston electronics PTY LTD.
(A unit of Jacoby Mitchell Holdings Ltd)
376 EASTERN VALLEY WAY, ROSEVILLE, 2069.
Cables and Telegraphic Address: 'WESTELEC' Sydney. Phone: 40 1212
Please forward free illustrated literature and specifications on Trio equipment.
Name.....
Address.....

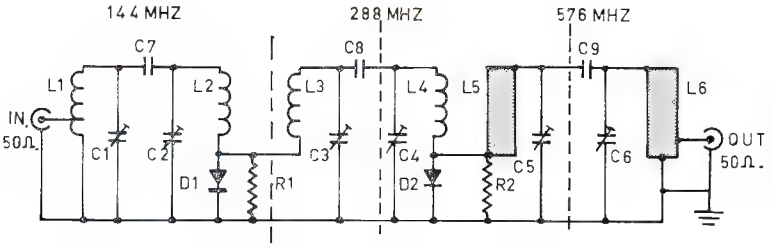

FIG. 4 ·144–576 MHZ DOUBLER—DOUBLER.

L1—8 turns 18 s.w.g., ½-inch i.d., tapped 1½ turns from cold end, spaced ¾ inch.
L2—6 turns 18 s.w.g., ½-inch i.d., spaced ½-inch.
L3—3 turns 18 s.w.g., 5/16-inch i.d., spaced ⅜-inch.
L4—2¾ turns 18 s.w.g., 5/16-inch i.d., spaced ⅜-inch.
L5—2.15-inch x 3/16-inch 22 s.w.g. brass strip, ¾-inch above box.
L6—2.5-inch x 3/16-inch 22 s.w.g. brass strip, ¾-inch above box.

C1 to C6—1 - 6 pF. glass piston or ceramic trimmers (see text).
C7—3.3 pF. ceramic.
C8—2.2 pF. ceramic.
C9—0.5 pF. ceramic.
D1, D2—MA4060A, BAY96, or similar.
R1—22K ¼w.
R2—56K ¼w.

f.m./c.w. input, 20 watts output was obtained at 576 MHz.

Physical layout of the improved design is given in Fig. 5 and can also be seen from the photographs. Basic dimensions are the same as for the single-diode design.

CONCLUSION

The designs presented provide ready means of generating more c.w. power on 576 MHz. than can be conveniently generated with valves, and with considerably less complexity.

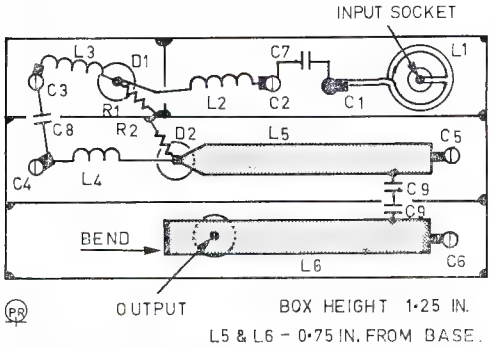

FIG.5 BOTTOM LAYOUT OF DOUBLER- DOUBLER

REFERENCES

(1) Motorola Application Note AN147, "High-Power Varactor Diodes: Theory and Application."

(2) Motorola Application Note AN191, "Varactor Diodes and Circuits for High Power Output and Linear Response."

(3) Turner, R. P., "ABCs of Varactors" (Foulsham-Sams).

— . . . —

70th ANNIVERSARY OF OLD "CC" TO BE OBSERVED BY W1SS

The year 1971 marks the 70th anniversary of the start of construction of the old "CC"—the original Marconi station on Cape Cod, Massachusetts, where the first wireless messages between England and the United States were exchanged by President Teddy Roosevelt and King Edward VII. of England.

Those stations desiring to work the site of the original Marconi station will find W1SS active on all bands from 160 metres through 2 metres during the DX hours for each band on the last week-end in April. Look for W1SS the Club Station of the Bedford Massachusetts Radio Club on 24th and 25th April, 1971.

Following is a list of the frequencies W1SS will use:—

Band	C.W.	Phone
160 Mx	1.801 MHz.	1.805 MHz.
80 ,,	3.580 ,,	3.935 ,,
40 ,,	7.100 ,,	7.260 ,,
20 ,,	14.050 ,,	14.315 ,,
15 ,,	21.100 ,,	21.375 ,,
10 ,,	28.100 ,,	28.700 ,,
6 ,,		50.200 ,,
2 ,,		145.100 ,,

Type	Source	Input Power (Watts)	Input Frequency (MHz.)	Output Power (Watts)	Output Frequency (MHz.)	Efficiency (Percentage)
BAY66	Mullard	10	500	5	1000	50
BAY96	,,	30	144	20	432	66
MA4060A equiv.*	Surplus	40	144	20	432	50
1N4386	Motorola	147	50	104	100	72
		60	50	39	150	65
1N4387	,,	40	200	22	600	55
1N4388	,,	25	500	15	1000	60
1N5144	,,	5	144	3	432	60
BXY27	Mullard	10	1000	6	2000	60
BXY28	,,	6	2000	3.5	4000	58
2N3632 (C-6)*	Numerous	30	144	10	432	33
PT2163D (C-6)*	T.R.W.	30	144	3.5	432	12
2N4012*	Numerous	25	432	?	1296	?

Table 1.—Some available varactor diodes and transistors which can be used as varactors.

* By measurement.

WINTER V.H.F. AND U.H.F. CONTEST

Editor "A.R.," Dear Sir,

In order to foster an interest in winter time v.h.f. and u.h.f. operating, I am running a Contest for Australian Amateurs on the bands from 52 MHz. and above.

The duration of the Contest is from 0001 hours E.A.S.T., **1st July, 1971**, to 2359 hours, **31st July, 1971.**

RULES

1. There is only one division—Transmitting, Open.
2. All Australian Amateurs may enter for the Contest whether their stations are fixed, portable or mobile.
3. All Amateur v.h.f. and u.h.f. bands may be used, but cross-band contacts are prohibited. Cross mode contacts will be permitted.
4. Only one contact per band per station is allowed each E.A.S.T. calendar day. Should two or more licensed Amateurs operate any particular station, each will be considered a separate contestant and must submit a separate log under his own call.
5. Entrants must operate within the terms of their licences.
6. **Cyphers.** Before points may be claimed for a contact, serial numbers must be exchanged. The serial numbers of five or six figures will be made up of RS (telephony) or RST (c.w.) report plus three figures, commencing at 001 for the first contact and increasing by one for each successive contact.
7. **Ineligible Contacts:** (a) On the 52 MHz. band, contacts using the mode usually referred to as Sporadic E will be disallowed. The sponsor reserves the right to make decisions in doubtful cases.
(b) Contacts over distances below 50 miles on the bands 52 to 585 MHz. will be disallowed as will contacts below 25 miles on bands 1215 MHz. and above.
(c) Contacts on net frequencies or through repeaters will be disallowed.
8. **Scoring** for all contacts will be based on mileage multiplied by a factor dependent on the band being used, as follows:

Band	Factor
50 MHz.	1
144 ,,	2
432 ,,	3
576 ,,	4
1215 ,, and above	6

Each log entry must show the claimed mileage and score. In the event of two stations disagreeing on the mileage, the average of the two estimates will normally be taken.

9. **Logs.** All logs must contain the following information: Date and Time (E.A.S.T.), Band, Emission and Power, Call Sign, RST/No. Sent, RST/No. Received, Distance, Points Claimed.
10. A trophy will be awarded to the winner, and consolation prizes may be awarded if the number of entries is sufficient or if any contact results in an Australian record being broken.

ADDITIONAL NOTES

Contestants will observe that the scoring table is wholly based on mileage, including 6 metres. This has been made possible by the disqualification of "Sporadic E" contacts which only occur infrequently at this time of the year. It was felt that this type of contact does not reflect the operator's use of "state of the art" equipment and that it was not fair to those Amateurs working with meteor scatter techniques to also allow "Sporadic E" contacts.

The multipliers are based on the capabilities of Australian stations using "state of the art" equipment or techniques and are in roughly inverse proportion to the distances which can currently be expected at that time of the year on each band.

The minimum distances are based on the normal maximum range of beginner type stations running 10 watts output to relatively small (by today's standards) antennas, except on 1215 MHz. where 2 watts output is considered more realistic.

References:—

(1) D. W. Bray, K2LMG, "A Method for Determining V.H.F. Station Capabilities," "QST," Nov. 1961, pp. 36-41.
(2) W. Smith, W1DVE, "'Closed' Band DX on 50 Mc.," "QST," May 1967, pp. 74-78.
(3) E. Jamieson, VK5LP, "Meteor Scatter Operations," "A.R.," Oct. 1970, p. 24.

Entries to the above Contest should be sent to: -

D. D. TANNER,
LYE & DIXON ROAD,
RIPPLEBROOK, VIC., 3818,

to be posted not later than 31st August, 1971.

Yours faithfully,
D. D. Tanner, VK8AU.

PRACTICAL VXO DESIGN*

An Interesting Approach to Frequency Stability in Oscillator Circuits

GUS GERKE, K6BIJ

You're on the air having an enjoyable conversation. You switch over to the other station and the fellow says, "Sorry, missed most of that. Someone drifted onto your frequency." Sound familiar? The "someone" is usually a combination of unstable v.f.o's and receiver drift.

The drifting signals one hears today suggest that v.f.o. stability is not really as good as claimed by equipment manufacturers and authors of v.f.o. articles in the Amateur magazines. The best answer I've found to this problem is the variable-frequency crystal oscillator, or vxo.

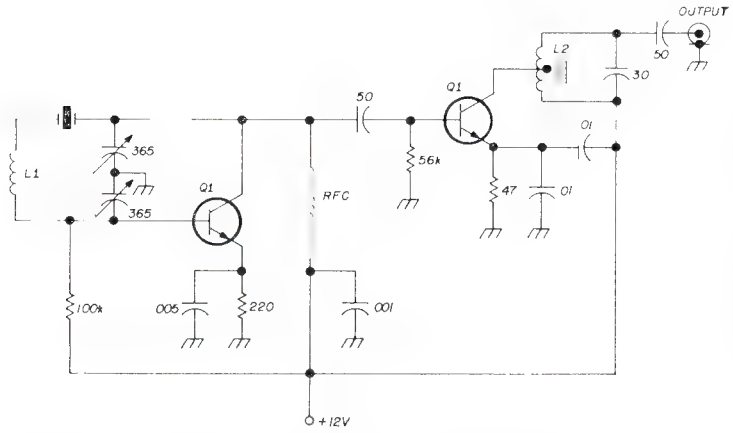

Fig. 1.

Circuit described in Reference 1. An excursion of 4-5 KHz. is claimed for an 8 MHz. crystal.

L1—16-24 uH. for 8-9 MHz. crystal.

L2—40 turns of No. 36 gauge wire, tapped at 16 turns.

Q1 2N706, 2N2219, 2N3662 or R.C.A. 40237.

The vxo circuits described in this article combine the flexibility (within limits) of a v.f.o. with the inherent stability of crystal frequency control. Frequency can be varied between 2 to 720 KHz., depending on the crystal frequency and other considerations, which I'll discuss. Many Amateurs I have talked to never heard of varying a crystal's frequency over such a wide range.

Very little information has been written about the vxo. One article[1] describes a circuit that can pull down the frequency of an 8 MHz. crystal about 4-5 KHz. before the circuit becomes "a rather inferior v.f.o.". With this circuit (Fig. 1) as a starting point, I designed the circuits of Figs. 2 and 3, using FT-241 crystals in the 450 KHz. region and the circuit of Fig. 4 using 3.5 - 8.5 MHz. crystals.

CIRCUIT DEVELOPMENT

The vxo shown in Fig. 2 is a modification I made to a BC604 f.m. tank transmitter. The vxo output goes through a stage of amplification and several frequency multipliers to obtain output on 21 MHz. I have used this vxo on 7 and 21 MHz. c.w. with excellent results. The circuit has also been used to operate a 2 metre transmitter. Eight crystals were needed to cover the entire 2 metre band.

The only addition to the BC604 was L1, C1. Capacitor C1 is used to pad the crystal frequency over a certain range, in this case 2 KHz. With an increase in padding range, the effects of temperature, vibration, and hand capacitance become more pronounced; and the same precautions in building v.f.o's must be used. These effects are small, however, and the crystal is still the frequency-controlling element. If you don't exceed the padding range, the vxo won't become an "inferior v.f.o."

The circuit of Fig. 3 seems to work well with the same low-frequency crystals used in the vxo of Fig. 2. The solid state version shown was also used with the BC604. Since the crystals furnished with the BC604 are less than 2 KHz. apart, continuous coverage to the next lower-frequency crystal is possible. Stable 2 KHz. padding was obtained with the circuit of Fig. 3.

A transistor vxo that produces stable 50 KHz. padding is shown in Fig. 4. This vxo can also be used with a crystal in the 8 MHz. region for 6 or 2 metre operation. Doubling will produce a padding range of 100 KHz. on 14 MHz., 150 KHz. on 21 MHz., with tripling, and 200 KHz. on 28 MHz. with quadrupling. To cover the entire 2 metre band, you'll need eight crystals (500 KHz. padding range).

Table 1 gives recommended padding ranges for the FT-241 crystals when used in the circuits of Figs. 1 through 3. If you are interested in a particular frequency range (as for net operation), try to use a crystal that will cover the first 25 per cent. of the padding range —then you'll have crystal stability.

The transistor circuits will start oscillating with 2.4v.; for more output, up to 12v. can be used. Unless followed by a frequency-multiplier, a buffer amplifier will be needed, as in Fig. 1.

FT-241 Crystal (MHz.)	Fig. 1 (MHz.)	Figs. 2 and 3 (MHz.)
0.45 (fundamental)	0.20	2.00
4.00 (9th harmonic)	2.00	20.00
8.00 (18th harmonic)	4.00	40.00
144.00 (324th harmonic)	72.00	720.00

Table 1.—Padding ranges.

A VXO FOR EXCITER USE

Suppose you want to design a vxo covering the entire 40 metre band and you have an exciter such as the Central Eletctronics 20A using a 9 MHz. crystal.

Higher than 9 MHz. injection frequency is preferred to avoid unwanted mixer products. Therefore the injection frequency will be from 7 + 9 = 16 MHz. to 7.3 + 9 = 16.3 MHz. Crystals in this range are overtone types and won't operate in these circuits. The solution is to use an 8.150 MHz. crystal and operate it on its second harmonic, 16.3 MHz. Padding 50 KHz. on the crystal fundamental frequency will produce 100 KHz. shift in the output. This will give you full coverage of the 7 MHz. phone band. An 8.1 MHz. crystal will cover the next 100 KHz., and another crystal at 8.05 MHz. will extend coverage to 7 MHz.

Crystals with frequencies of 8.125 and 8.075 MHz. will be useful if you want extra stability and don't wish to pad more than 50 KHz. on harmonics

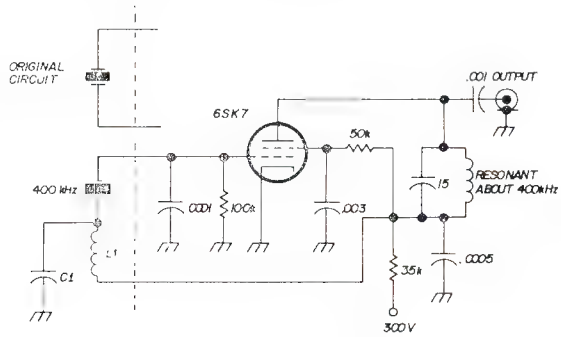

Fig. 2.—Oscillator modification made to a BC604 transmitter using low-frequency crystal.

C1 -Broadcast radio variable with both sections in parallel.

L1 Broadcast variloopstick antenna or similar.

* Reprinted from "Ham Radio," August 1970.

(25 KHz. on the fundamental). These crystals are also useful for 2 metre work.

TUNING CAPACITOR CONSIDERATIONS

Referring to Fig. 5, capacitor C1 is used to bring the crystal frequency within the range of C2. Both capacitors should have a straight-line frequency response as a function of angle of rotation of the rotor plates. This capacitor characteristic is important for vxo calibration and tuning. For example, the tuning capacitors shown in the circuits of Figs. 1 through 4 are common broadcast-band variables. When these are used, frequency decreases slowly at first as the capacitor rotor is turned. Then the frequency change becomes faster, until finally a hairline change in rotor position will produce a 1 KHz. jump. This, of course, is very inconvenient at the lower frequencies. The sketch of Fig. 6 illustrates the geometrical relationship of the stator plates in these two versions of variable capacitors.

In the circuit of Fig. 5, capacitor C2 should be of good quality, otherwise contact-scraping noise will be heard in the receiver; small jumps in frequency may also occur. A capacitor with an insulated rotor is recommended for C2.

CIRCUIT DESCRIPTION

The purpose of R1 in Fig. 5 is to lower the Q of L1. This allows a larger padding range and more stable operation near the low end of the range. If the frequency changes when touching the r.f. choke, the choke is too small. Resistor R2 prevents oscillation at the r.f.-choke resonant frequency.

Use a two-section b.c. variable capacitor to find the exact value of C3 and C4. Then replace the b.c. capacitor with two silver micas. A value of 200 pF. seems right for the circuit.

Battery voltage may be 2.4-12 volts. Higher voltage may result in drift due to heating. I use 6 volts in my vxo.

As far I know, the vxo designs described in this article have never been published before. The circuit for the 20A exciter has been used on 40 and 15 metres in both the c.w. and s.s.b. mode. All reports were crystal quality, and all operators asked for the circuit diagrams; so I've presented them here to share with others. My old v.f.o. has since drifted into the junk box.

REFERENCE

1. J. R. Fisk, W1DTY, "73 Useful Transistor Circuits," "73," March 1967.

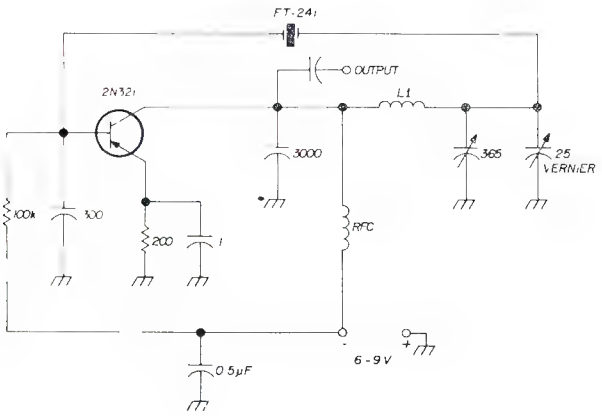

Fig. 3.

Solid state version of the vxo in Fig. 2.

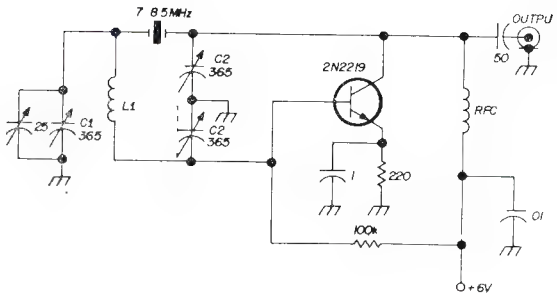

Fig. 4.—Solid state vxo that produces stable 50 KHz. padding on 7 MHz. It can be used for 6 or 2 metres also.

L1—40 turns of No. 32 gauge wire close-wound on 3/8-inch slug-tuned coil former.

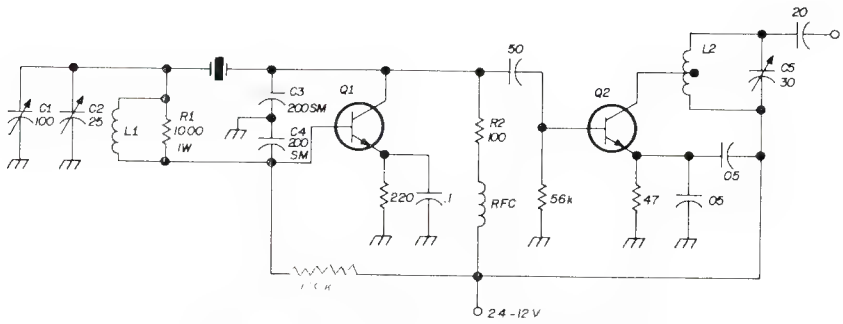

Fig. 5. Vxo-doubler circuit for a typical exciter.
Three crystals are required for full coverage of the U.S. 40 metre band.

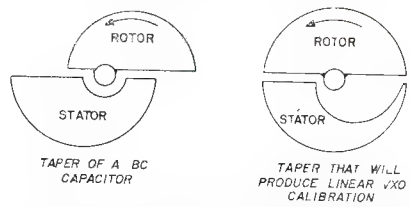

Fig. 6.—Mechanical configuration of straight-line wavelength capacitor used for b.c. band and a straight-line frequency capacitor.

☆

DX NEWS

It will be noticed that there are no DX notes in this issue. The following letter was received from the DX Editor and it is regretted that NO items of news were received from VK AMATEURS. If this DX page is wanted by readers, more co-operation will be necessary. Editor.

Editor "A.R.," Dear Sir,

I am afraid we shall have to give the DX page a miss this month. The absence of news from England due to the mail strike has upset the work and only one bulletin has arrived from the U.S.

There has NOT been one item of news from VK this month, and with nil coming in, I guess I can't get anything out.

I hope to have a full page for the following month as I have arranged a fresh source from the States. 73,

—Don Grantley.

☆

EXPEDITION TO LACCADIVE GROUP OF ISLANDS

The Amateur Radio Society of India has sponsored a team headed by Lt. General K. Umrao Singh, VU2US, to visit the Laccadive group of Islands and operate an Amateur station for ten days covering two consecutive week-ends in April 1971. Details are given below:

Operation is expected to start on Saturday, 10th April, 1971, ending on Monday, 19th April, 1971.

Frequencies: 14 MHz. consistently, optional 21 and 28 MHz., both on c.w. and s.s.b.

The rig to be used: 150 watts p.e.p. The call sign will be VU7US.

Operators in the party will include VU2CK, VU2QM, VU2HV, VU2KM and VU2RK.

QSL address: Strictly via A.R.S.I., P.O. Box 534, New Delhi-1, India.

Note.—All QSL cards will be posted to the I.A.R.U. QSL Bureaus by the A.R.S.I. and no string is attached in any shape whatsoever. QSL cards accompanied by IRCs will be mailed accordingly from the A.R.S.I. Enclosing cash currency in envelope is illegal and forbidden according to the country's regulations.

CHANGE OF ADDRESS

W.I.A. members are requested to promptly notify any change of address to their Divisional Secretary —not direct to "Amateur Radio".

Overseas Magazine Review

Compiled by Syd Clark, VK3ASC
and R. L. Gunther, VK7RG

"HAM RADIO MAGAZINE"

November 1970—

Editorial.—Concerning the new IC, the Signetics N565 monolithic phase-locked loop, a truly remarkable device which can be used for synchronous detection, frequency multiplication or division, f.m. demodulation, and much else; six pages of data and applications (from the manufacturer).

Solid State 1296 MHz. Converter, by VK4ZT. Appeared originally in "A.R."

How to use the Smith Chart, by Jim Fisk.—This is the first time this odd device has made sense to me. Must-reading for any serious Amateur.

Injection Laser Experiments.—Lovely for modulated-light enthusiasts.

Frequency Spotter for General Coverage Receivers.—Simply a transistor crystal oscillator for a 1 MHz. crystal.

Radio Teletype using S.S.B. Transceivers.

Auxiliary Receiver for 160 Metres.—Raise the maximum frequency of an ordinary b.c. or car receiver.

A Counter Gating Source. Using the mains frequency as a gate for frequency counters.

Voltage Regulation using the R.C.A. CA-3055 IC.—Very versatile and impressive.

Linear V.H.F. Tank Circuits.—The design of linear single ended v.h.f. tanks using quarter wave transmission lines on 2 metres.

Printed Circuit Boards without Printing.—The old trick of removing copper from a board by use of an engraving or dentist's drill. (Ferric chloride is much easier! If you find it difficult to apply "resist", simply use black felt-tip pen ["Texta-color" or equivalent], wash off with acetone after etching.) But his idea is good, of removing only the copper in insulating paths, leaving most of it on the board for low inductance and shielding.

A Simple Test Set for Transistors and Diodes.—Uses a couple of diodes and lamps. Not very good. You can accomplish as much by judicious use of an ohmmeter (but not on its lowest ohm scale).

December 1970—

As usual the decimal points in the diagrams are becoming vanishingly small, and can cause real (and dangerous) confusion. One hopes that this problem will be solved by the Editor at an early opportunity.

A Filter-Type S.S.B. Generator, W9KIT. Another one, transistorised. The balanced modulator and filter certainly seems a simple way to do it. The concluding statement is impeccable: "Why not try a little construction? There's nothing to compare with the satisfaction gained in creating something worthwhile"!

Noise, Radio Frequency Interference, W1DTY. The usual noise sources and their cures (at the source), with a special word about fluorescent lights: chokes as big as 2.5 mH. are needed. In general, a good earth is essential—generally not the one provided by the mains, at least in Australia.

The R.F. Bridge, WB2EGZ. Very good. Same as the "Antenna Noise Bridge" described in "H.R." in 2/70, and in "QST" of 12/67, and put to good use by E. Noll (W3FQJ) in his interesting series on antenna construction, published by Sams. People still persist in using simple v.s.w.r. bridges even though they solve little and can mislead greatly. The balanced r.f. noise bridge is much the superior, is not much more complicated, and is well described in this, the most useful constructional article in this issue of "H.R."

Avalanche Transistor Circuits, W4NVK. Quite ordinary transistors can be made to show astounding frequency response and peak power when operated in the avalanche mode (though this will not work with some of the older types having low avalanche voltages). Example, a 50 mW. unit can produce 100 W. peaks with a 1-2 nsec. rise time! To produce avalanche, merely apply some 200 V. to a transistor in common-emitter mode through a large resistor and drive the base over the conduction threshold at say 10 MHz.; if the driving signal is tuned to WWV it will determine the accuracy of all of the harmonics to some 1000 MHz., obtained from the avalanche unit. A 5 KHz. drive gives S9 signals to 30 MHz.! Avalanche can be generated at low voltages simply by turning the transistor upside down. Most interesting.

Low-Power Transmitter and Indicating Wavemeter, W6NIF. A keyed one-transistor oscillator plus diode detector with amp.

A Synchronous-Phase AFSK Oscillator for RTTY, W6FOO. The generation of pure sines to encode s.s.b. transceivers for r.t.t.y.

Identifying Unknown Transistors, W2FPP. The usual ohmmeter tests, but don't use the ohmmeter on the lowest range if it passes substantial current. Amplification and Beta are tested by substitution into an R/C oscillator or an amplifier, but in my opinion it's easier to use the ordinary bias-shift method (e.g. "A.R." 12/66, "HR" 3/68, 8/68). The most useful suggestion he gives is to test r.f. performance in a crystal oscillator; see also "Break-In" 3/68.

Harmonics, Distortion and Splatter, K5LLI. See the better series being run currently in "A.R." (Or at least recently, if it has terminated when this appears.)

Improved Super-regenerative Receiver, by JA1BHG. Not surprisingly, transistor action in this oscillator is improved by suitable impedance matching, e.g. tapping collector and emitter on the tank coil. A diode across the emitter tap reduces hangover (see "H.R." 11/68), but in my opinion you still need an r.f. amp. to reduce the radiation. And selectivity is still very broad. Scope for application of the simple super-regen. is, alas, becoming ever more restricted on the fecund amateur spectra.

A Flexible Voltage-Regulated Power Supply, W9SEK. Uses an IC with ten connections. The current-limiting resistor is on the wrong side; should be on the supply side, not in the feedback loop on the load side! This article is needlessly uninformative.

The Ham Notebook (Letters): Resistors can be frequency sensitive above 10 MHz. or so; also good piece about this in late 1970 issue of "Spectrum" (N.Z.) Beware.

A WWV (or Lyndhurst) converter can be made to cover Amateur bands by beating WWV against a suitable crystal.

Vackar (and other) oscillators will oscillate better on low d.c. voltages if the load resistor is replaced by a choke (but beware of spurious resonances).

A pi-net can be used to match indoor antennas to commercial rigs; what won't they think of next!

An f.m. deviation-indicator can be made simply by tuning one receiver 15 KHz. (etc.) away from another, and feeding both into a discriminator feeding a c.r.o.; ingenious.

An argument over whether an inverted vee has a higher or lower resonant frequency compared to a dipole. It appears to depend on the height of the ends of the vee above the ground, the electrical length decreasing as the antenna becomes lower.

Another correspondent (as well as an author) has triumphantly discovered that shorting out a portion of a tuner coil will absorb r.f. power. One wonders whether people bother to learn basic circuit theory nowadays before obtaining an Amateur licence; the phenomenon is hardly restricted to the Yankee nation.

January 1971—

Editorial: An American group plans to send "Moonray" up with some manned Apollo flight to the moon. This packet will contain a sensitive low-noise rx tuned to 439.9 MHz., a signal processor, and identifier, six to eight channels of telemetry, and transmitter output on 430.1 MHz., as well as a laser receiver. Power by nuclear thermoelectric generator, and expectation is that the unit can work continuously for over a year. All you will need to work through this unusual repeater is an antenna of greater than 15 dB. gain capable of tracking the moon, a transmitter of 50w. for c.w. (more for other modes) on 439.9 MHz., and so forth.

The Mainline ST-6 RTTY Demodulator, W6FFC. An ultra-modern r.t.t.y. tuning unit that has the latest in circuit design, virtually the ultimate for radio teletype. Seventeen pages long.

Intermittent Voice Operation of Power Tubes, W6SAI. Eimac have a reputation for publishing sensible literature for Amateurs, and now this authority on such things states in plain language the first really realistic evaluation of valve performance I have seen stated by the electron tube industry. We all know that valves are capable of considerably more performance than appears from their "ratings" and we tend to think that there is really no limit if we can keep the bottle cool enough. But there is, as users of speech compressors have sometimes found to their dismay. W6SAI says it out loud, says why, and what can be done about it. It depends on the Duty Factor, and can be summed up in a new "Intermittent Voice Service" rating. It is essentially defined as maximum voltage and current rating for a signal having a Duty Factor of 0.5 (or less). Eimac, and presumably the other manufacturers too, will be applying the IVS rating to material designed for Amateur use, but there is no reason why we couldn't also establish our own values for IVS rating on other valves used in Amateur practice, such as t.v. line output items, etc.

Modifying the Heath SB-200 Amplifier for the New 8873 Zero-Bias Triode, W6UOV (also of Eimac). This is one of the valves for which Eimac has prepared IVS ratings, and these were discussed in the abovementioned article.

Two Metre F.M. Frequency Meter, WA4JAZ. A highly accurate heterodyne frequency meter giving crystal-controlled frequency markers on 2 metres.

An R.F. Power Amplifier for 200 MHz., WB-6DJV. Uses a 7854 valve with very simple construction and high performance. Possible substitute is the 5894, but it could require neutralisation, which it appears the 7854 does not, if good geometry is employed. D.c. input about 50w.

Inexpensive S.W.R. Indicator, WB2GQY. Wind about 9 turns of wire to ¾-inch diam., connect to diode, condenser, and meter in the usual detector circuit. Slip the coil over the transmission line or co-ax., run back and forth to determine strengths of loops and nulls. Is somewhat better than the usual in-line v.s.w.r. bridge in that it can also indicate match of the antenna to the line as well as match of the transmitter to the line, etc. But an r.f. noise bridge and explicit antenna coupler are better; see last month's "H.R." And I do disagree strongly with this author who says "(a matching device at the transmitter) involves added expense, so the average ham [sic] uses the cut-and-try approach until the transmission line electrical length is close to a half-wavelength or multiple . . . When this condition is met, the transmitter will load properly." Aside from the fact that this will only apply if the antenna is matched by the line, it ought be now to be common knowledge that a suitable matching coupler is desirable to effect good tx-line matching with minimum difficulty and with inherent harmonic reduction. How the use of a coupler could be harder than cutting lengths of line, is a mystery; that it is more "expensive" is a stupid argument for patently obvious reasons. And on top of all of this, Carl Drumeller, W5JJ, has published ample material in "Ham Radio," "73" and "E.E.B." to show that on one hand a coupler is virtually necessary for the commercial transmitters now in such common use, and on the other hand, that v.s.w.r. up to about 4:1 is relatively harmless at ordinary h.f. Isn't it time that Amateurs woke up to the more obvious aspects of v.s.w.r. matching, and coupling?

Fire Protection in the Ham [sic] Shack, Darr and James. Use fuses of the right size: both current **and** voltage rating. Mains sockets (and plugs) should have clean contacts, particularly a problem in old houses; house wiring should be adequate. His suggestion is excellent that a special mains line should be run to the radio room, and provide plenty of outlets. This is a vitally important subject, often overlooked.

MOSFET Converter for Receiver Instrumentation, WA9ZMT. Uses a 3N159, feeds a c.r.o. to monitor the i.f. passband of a receiver.

A Simple C.W. Monitor, WA9OHR. Two transistors of opposite polarity connected in the regenerative feedback mode, powered from the keyer. Simple indeed.

The Ham Notebook (Letters): An ohmmeter can be used to find the sensitivity of an unknown meter. Only practical with v.t.v.m. For the calculations involved, it is just as simple to use a handy dry cell and a few resistors.

A wire coat hanger can be made into a long screwdriver, when needed for adjustments in difficult places.

Sensitivity and stability of the 75A-4 receiver can be improved. Mostly by replacing leaky condensers; in any old receiver it is a good idea to replace all condensers on principle.

"RADIO COMMUNICATION"

October 1970—

The G8ARV Two Metre Portable Receiver. All solid state FET front-end into a tunable 22.5-24.5 MHz. i.f. and thence into a 10.7 MHz. i.f. filter, etc.

Loft Aerials. GM4QK describes means of being an active Amateur without shouting it to the neighbours.

An Automatic Rotator, G8CXV. Some "junk" and lots of ingenuity and now set and forget.

A Simple Transistor Tester. G3NUQ describes a simple test set we could all make and use.

Technical Topics. G3VA continues his review of the happenings in Radio. "Solid State Receiver Design" by W0IYH and many more. A warning is sounded against the constant use of disc ceramic capacitors as "decouplers"

without checking that they are doing the desired job. Seems some of them resonate as low as 23 MHz.

November 1970—

Current Comment concerns itself with the need of the R.S.G.B. to increase subs to £4 ($A8.60). Inflation is no respecter of countries.

Parasitic Oscillations in V.h.f. Power Amplifiers, G. S. M. Teale. Reprinted from "Mullard Technical Publications". Solid state circuits are under discussion.

An R.F. Indicator for the Blind, G2TA. An aid for those without sight.

A Compact 150W. Amplifier for 144 MHz., G6JP. A 4CX250B in a grounded cathode circuit.

A Simple 3 CM. Polaplexer, G3EEZ. The klystron used is a 2K25 or 723A/B.

The G3XGP Vackar Oscillator. Various circuit configurations are discussed. The author claims there is little to choose between them.

A Portable C.W. Transceiver for 3.5 MHz., G3EJF. 2N708, 2N708, ECF82, 5763 in the tx, and 2N3819 diode ring modulator, BC169, BC-169, BC169, 2N708 is the receiver line-up.

Technical Topics, G3VA. Pat Hawker discusses the latest information to appear in the various journals which are available to him. His "TT" is much lengthier than this review and is virtually a precis of the technical articles Pat considers worthy of his attention. This month is devoted to Direct Conversion, d.c./d.c. converters and co-axial reed relays amongst others.

December 1970—

A 1-10-100 KHz. Calibrator, G3UCM. The article enlightens the reader somewhat more than the title for what the author really means is that this calibrator provides signals at intervals of 1, 10, and 100 KHz. to 30 MHz. at least.

Obtaining Deviation, G3EDD. F.m. or p.m., valve or transistor.

Flare Spot, Part 1, Crime Wave. G3BGL tells a radio-detective story in three parts.

Technical Topics, G3VA. K2QBW multiband aerial, base-fed verticals, loft loop aerial, sites—how much do they differ, solid state superhet. ideas, two-stub notch filters for t.v.i., how do you tune a toroid? (see p.835), r.f. power transistors and broadband amplifiers, audio filters, simple linear time base.

Modifications to the HW-100, SB-100 and the SB101.

"SHORTWAVE MAGAZINE"

October 1970—

Getting on VFO for the VHF/UHF, G2JF. A valve type v.f.o./driver system beginning with a v.f.o. on 3.42-4.422 MHz., using the familiar Clapp oscillator circuit. A system of heterodyning the v.f.o. second harmonic on about 7 MHz. with a signal of 152 MHz. from a multiplier chain is used to provide output on 145 MHz.

Good or Bad Reflections, G3TMG. A critique of the article by VK1AU which was published in "S.W. Mag.," August 1970.

Varactor Diode Circuits, G3TNX. Theoretical considerations and some practical circuitry.

VFO TX for Twenty, G3HHV. Describes an experimental QRP rig which can be duplicated at low cost. Final is two BFY51 transistors into a pi network which cost the author 30/- (in U.K.) and gave 160 QSOs in 42 countries over a few weeks.

Design of Linear Amplifiers, G6HL. A discussion of the use of 4CX/250 and 4CX/350 types for h.f. and v.h.f. work.

"73 MAGAZINE"

November 1970—

Differential JFET Pre-amplifier.—A highly commendable endeavour to use discrete components to achieve superior results by borrowing from IC technology.

Remote Quad Tuning.—An ingenious arrangement is employed to allow reflector stub tuning directly at the operator's position, by bringing the reflector termination down to a tuning capacitor via a feed line.

2 Watt 6 Metre Transmitter using the Heterodyne V.F.O.—Instead of the crystal-heterodyne-v.f.o. (which appeared in a previous "73") you can feed any source of 120 mW. 50 MHz. to drive this simple but effective common-emitter class C r.f. amplifier to 1 watt output.

Semiautomatic F.M. Channel Scanning.—Oscillator frequency is switched automatically between two channels, by use of a "flasher" module, a simple multivibrator which drives transistors at the oscillator cathodes.

Low Cost Automatic Keyer.—Another one, using only five transistors.

A.C. Switching with Self-Powered ICs.—R.C.A's CA3059 allows turning a Triac on and off by switching only when the a.c. voltage passes through zero.

Pioneer Radio on the Prairie.—Rather interesting tale of the activities of E. E. Krebsbach, 45 years ago.

The SST-I: Solid State Transceiver for 40 Metres. The receiver follows the May 1969 "QST" design of a direct conversion design using an R.C.A. IC.

A Low-Cost R.F. Wattmeter.—The usual diode probe r.f. voltmeter.

Calibrate That Calibrator.—Beat the calibrator against WWV (or Lyndhurst), and adjust "crystal tune" until the S meter stops pulsing. Allows sub-sonic zeroing, with b.f.o. off.

Study Guide; General Class Licence, Part IV.

A $1.40 Noise Generator.—Back bias a u.h.f. diode to the conduction point through a large resistor. Zeners also work, at lower freq.

(Note.—This magazine commonly contains a large amount of editorialising by various parties, and numerous controversial letters. Although a lot of rubbish is exposed, some cogent points are raised, and if you have a spare hour or two, it can make interesting reading.)

December 1970—

Solid State Exciter, W6YUY. S.s.b. for the home-brewer with plenty of test equipment.

Delta F Solid State Control of S.S.B. Exciters, W4NVK. A varicap vernier frequency control.

A 2 Metre Minimitter for Repeaters, WB6BIH. One watt output, 18 MHz. xtal, 22.5 volt supply.

Receiver Offset Tuning for HW100, WA8EAW. A link coupled remote tuning system for v.f.o's.

The Little Gate Dipper, W5ETT. Another simple 1.7 to 225 MHz. g.d.o. with MPF102.

Your Second Linear, W4AYI. Uses 3-500Z.

General Class Study Guide, Part 5. Valves.

Pipes It Talks, W2FEZ. Make your own electrostatic loudspeaker out of a newspaper.

Transistor Test, WB6QQP. A very simple Beta, leakage, shorts tester.

Two-Terminal Current Limiter, Gerald Beene. A two-legged fuse to protect the three-legged variety.

January, 1971—

The usual editorial tirades, and some interesting notes on how Japanese industry is undermining the manufacturers of commercial amateur equipment. R.I.P. And a number of interesting letters from readers.

LX for Leisure, G3BID. "If you would like a leisurely vacation with a bit of amusing radio operation thrown in, you might consider Luxemburg."

Try DXing the World . . . the Hard Way, K6KA. A magnificent world tour costing "thirteen thousand kilobucks" in which the new and unusual sights included numerous antennas and operating positions.

Split Phones, A DX Operating Aid, GW8PG. GW8PG discovers dual diversity, with headphones. Good idea.

A Special Report: Ham Radio Manufacturing: A Struggle for Survival, W2NSD. The question is: will **Amateur** Radio survive? "U.S. ham-equipment manufacturers could meet foreign makers head-on in their own territory. . . . V.h.f. f.m. is proving to be a vitally needed shot in the arm for ham [sic] radio."

Heath Tener Modification, K8JLK. A major engineering project: the correct size fuse is obtained automatically when the Heath Tener is installed in the automobile.

Duty Cycle Duty Factor, W2OLU. Good introduction to the concept of duty cycle (percent. of time the key is held down). But unsatisfying. The real implications for the choice of valves or transistors are left unsaid; see "Intermittent Voice Operation of Power Tubes," by W6SAI, in "Ham Radio," 1/71, for the real oil.

Repeater Zero Beater, W1IRH. Monitors the repeater receiver's discriminator voltage during a transmission and stores a voltage in a condenser. When the transmission is completed this voltage is converted to a tone which is transmitter during the repeater's tail period. Interesting idea.

Getting HEP to ICs, Staff. Tips on wiring, soldering, cross references, and simple projects using the Motorola HEP Integrated Circuits.

Voices from the Past, Staff. Quotes from Amateur Radio 50 years ago, Radio 30 years ago, and "73 Amateur Radio" 10 years ago. The goode olde days?

Basics of Surplus F.M., WB2AEB. How to buy your own.

A Parabolic Beam for 10, 15, 20 Metres, by WA2SJZ. Very good. Works on the same principle as the corner reflector, but it's three-dimensional. Uses aluminium tubing and No. 12 wire as support for aluminium sheet metal strips. Works on all three bands, with forward gain from 14 to 25 dB., depending, and 40 dB. F/B. The driven element is any good quality vertical mounted at the centre, and of course the author recommends a commercial unit. But he does not mention the effect of wind in a good blow. I'd use bonded brass flyscreen.

The Galaxy FM210, K2ULR. A 2 mx f.m. transceiver described to be as good as a Jap. unit (my how times have changed!), but costing even less. "And, mind you, the FM210 is all-American, parts and labor." Unless they have a magician in the engineering section, something will have been compromised in this wondrous feat. But it does look quite attractive.

Lightning as it Affects Ham Radio, Patzsch. Very good. Install a suitable safe lightning arrestor on the mains and also run **stranded** down wires (4 gauge!) from the antenna tower on your house, down to a good earth connection on either side of the house. See also "Fire Protection" in Jan. 1971 "Ham Radio."

IC Receiver Accessory, W2EEY. Plugs into a headphone jack, runs a loudspeaker, a.g.c., and tunable a.f. filter. Slight adjustment of the a.g.c. feedback resistors may be necessary, but subsequent models will probably include this inside the IC. A do-it-yourself project.

Inverted Attic Antennas, W2SF. Inverted vee in an attic, uses electrical conduit for elements. Okay with lots of American output power, but house wiring can absorb energy when efficiency matters.

Double-Balanced Mixers, K3PUR. A survey of different types. The transistor double-balanced mixer looks interesting and requires no balanced transformers.

Quick and Permanent Tool Marker, K5JKX. 24v. through the tip of a draughtsman's pencil. But it's easier if you connect to the lead at the other end of the pencil—as long as current doesn't flow too long at a time! Also works if you use any piece of sharp metal as electrified scribe, but control is a bit harder.

A New Start from Washington, W8GI. A bitter attack on A.R.R.L. and its Establishment. We can be truly grateful that the problems of the W.I.A. are as tractable as they are!

Amateur Radio Licence Study Guide, Staff. With such a comprehensive list of requisite technical subjects as are presented here, it does seem rather a pity that so many of the licensees are destined to apply their knowledge to assembling commercial plugs, IC and antennas.

FEEDBACK

I am indebted to Ron VK3OM for pointing out that my remark in the review published in "A.R." Jan. 1971 in relation to an article in the Oct. 1970 issue of "QST" titled, "An External VFO for the SB100 Transceiver" was incorrect. I was thinking of the Sideband Electronics Raytheon solid state transceivers SB-33 and SB-34. These transceivers were designed to cover quite a small segment of the Amateur bands as "standard". VK3ASC.

☆

HY-Q ELECTRONICS EXPAND

Hy-Q Electronics Pty. Ltd., Australia's leading quartz crystal manufacturers, have announced that, as a result of ever increasing demands for their products from Australian and overseas users, a major expansion of their production has been necessary.

Hy-Q have recently completed the construction of a modern, fully air conditioned plant located at 1 Rosella St., Frankston, Vic., devoted entirely to the production of quartz crystals and related frequency control products which has tripled the company's previous production capacity.

The new plant has been equipped throughout with the most modern crystal production and testing apparatus including equipment for full scale production of cold weld crystals.

The new facility includes a separate, fully equipped, rush order production unit to provide emergency service without disrupting normal production.

The company's original factory at 10-12 Rosella Street is being converted to provide fully air conditioned development laboratories, engineering shops and office facilities.

— . . . —

W.I.A. V.H.F.C.C.

New Member:

Cert. No.	Call	Confirmations 52 MHz.	144 MHz.
78	VK4ZJB	120	—

SOME N.Z.A.R.T. AWARDS

AUCKLAND BRANCH CERTIFICATE

Send list of 15 members of Auckland Branch worked since 1st January, 1957, to ZL1TB—no charge.

MANAWATU AWARD

Send list of five stations contacted in the Manawatu area (city of Palmerston North) to ZL2AFT, 431 Albert St., Palmerston North.

CHRISTCHURCH AWARD

Send certified list as follows: ZL 15 stations; VK 10 stations; rest of world 5 stations, with equivalent of U.S. $1 to Awards Custodian, Box 1733, Christchurch, N.Z.

AUCKLAND REGIONAL AWARD

For contacts with the A.R.A. area—viz. Rodney, Franklin, Waitemata counties and all cities and boroughs within these as follows: 1, working 25 areas (stations outside N.Z. 15 areas); 2, working 45 areas (30 areas); 3, working 60 areas (45 areas); with Special Classes as follows: Auckland City and Central Boroughs, 30 areas; Northern and Western Districts, 15; Southern Districts, 15. A special checking list is obligatory (3 for 5 cents), available from ZL1QW, New North Rd., Mt. Albert, Auckland, to whom all enquiries should be addressed.

W.A.P.—WORKED ALL PACIFIC

Available in "Phone/C.w." and "Phone only" catagories. Requires **thirty** confirmations from:

CR8/10—Port. Timor
DU—Philippines
FB8—Adelie Land
FK8—New Caledonia
FO8—Fr. Oceania
FW8—Wallis Is.
FU8/YJ—New Hebr.
KB6—Baker, Howland
KC6—Carolines
KC6—Palau (W. Car.)
KG6—Marianas
KG6I—Iwo Jima
KG6—Marcus
KH6—Hawaiian Is.
KJ6—Johnston Is.
KM6—Midway Is.
KP6—Palmyra Is.
KS6—Samoa
KW6—Wake Is.
KX6—Marshall Is.
PK1, 2, 3—Java
PK4—Sumatra
PK5—Borneo
PK6—Celebes, etc.
JZ0—"Neth." N.G.
VK—Australia
VK2—Lord Howe Is.
VK4—Willis Is.
VK0—Macquarie Is.
VK9—New Guinea
VK9—Norfolk Is.
VK9—Papua
VK9—Christmas Is.
VK9—Cocos Is.
VR1—Gilbert Is.
VR1—Ellice Is.
VR1—Br. Phoenix Is.
VR2—Fiji
VR3—Fanning Is.
VR4—Solomon Is.
VR5—Tonga
VR6—Pitcairn Is.
VS4—Sarawak
VS5—Brunei
ZC5—Br. N. Borneo
ZK1—North Cook Is.
ZK1—South Cook Is.
ZK2—Niue
ZL—New Zealand
ZL1—Kermadec Is.
ZL3—Chatham Is.
ZL4—Campbell Is.
ZL5—N.Z. Antarctica
5W1—Samoa
ZM7—Tokelau Is.
VK9 (C2)—Nauru Is.

Different prefixes are acceptable as long as the countries are as listed.

W.A.Z.L.—WORKED ALL NEW ZEALAND

Requires 35 different Branches of N.Z.A.R.T. from the following:

01 Ashburton
02 Auckland
03 West Suburbs
04 Cambridge
05 Christchurch
06 Dannevirke
07 Dunedin West
08 East Southland
09 Egmont
10 Franklin
11 Gisborne
12 Hamilton
13 Hastings
14 Hawera
15 Central H.B.
16 Horowhenua
17 Huntly
18 Hutt Valley
19 Inglewood
20 Manawatu
21 Manukau
22 Marlborough
23 Marton
24 Motueka
25 Napier
26 Nelson
27 New Plymouth
28 Northland
29 North Shore
30 Otago
31 Pahiatua
32 Rahotu Coastal
33 Rotorua
34 South Canterbury
35 South Otago
36 South Westland
37 Southland
38 Taumaranui
39 Tauranga
40 Te Awamutu
41 Thames Valley
42 Titahi Bay
43 Waihi
44 Waikato East
45 Waimarino
46 Wairarapa
47 Waitara
48 Wanganui
49 Westland
50 Wellington
51 Whakatane
52 Wairoa
53 Te Puke
54 Patea
55 Waitomo
56 Hornby
57 Tokoroa
58 Helensville
59 Mangakino
60 Taupo
61 Central Otago
62 Reefton
63 Upper Hutt
64 North Otago
65 Papakura
66 Auckland V.H.F.
67 Kawerau
68 Nth. Canterbury

GISBORNE AWARD

Send certified list of Gisborne contacts made after 1st January, 1969. ZL requires 4 stations; rest of world 2 stations, with three IRCs or 25 cents in stamps of any country to ZL2GX.

W.A.D.—WORKED ALL DISTRICTS

A V.h.f. Award requiring confirmation of QSO with ZL1, ZL2, ZL3, ZL4 on a v.h.f. band. Four confirmations required.

N.Z.A.—NEW ZEALAND AWARD

Requires a total of 101 confirmations as follows: 35 from ZL1, plus 35 from ZL2, plus 20 from ZL3, plus 10 from ZL4, plus 1 from a ZL Territory (N.Z. Antarctica or Chatham Is. or Kermadec Is. or Campbell Is.). N.B.—This one Territory may be substituted by 20 extra ordinary ZL confirmations if desired.

Applications should be posted to ZL2GX, 152 Lytton Rd., Gisborne, N.Z. Note.—G.C.R. list may be sent—most overseas Societies will check QSLs, etc. Please ensure that full information is given on submitted list.

— . . . —

THE BRISBANE DX CLUB AWARD

The Brisbane DX Club has been in existence for many years and now has been extended to 25 active Amateurs in the Brisbane area.

The award is issued to DX (overseas) stations only, and to qualify it is necessary to work five members of the Club and send **your** QSLs for the five contacts to the Secretary of the Club, whose address will be given by the fifth station worked. Immediately the cards are received by the Secretary, the award will be issued and sent free by surface mail. IRCs are not required unless air mail return is required.

Call signs of member stations are not publicised, you must challenge the Queensland station, asking him if he is a member of the Brisbane DX Club. When you get five replies in the affirmative, the award is yours.

Please note. You do not wait for the VK4 cards, it is the five cards YOU issue for the Brisbane stations that are required by the Secretary for the award issue.

The Brisbane DX Club Rules

1. The club membership is limited to twenty-five members.

2. To be eligible for membership, members may operate on any band, 10 to 80 metres.

3. The majority of members of the Club must be financial members of the Wireless Institute of Australia.

4. The majority of office-bearers must be financial members of the W.I.A.

5. All members MUST QSL all DX stations.

6. DX stations, to be eligible to compete for the DX Club Certificate, must ask the question "Are you a member of the Brisbane DX Club?"

7. The call signs of the member stations of the Club must not be mentioned over the air, but there is no objection to the christian names of members being mentioned.

8. After five contacts have been made, the DX station must apply to the Club Secretary for the Certificate, giving the details and forwarding five cards. Members may (or should) advise DX stations of these requirements.

It is requested that members advertise the Club over the air on all occasions possible. Give the qualifications necessary but do not mention the call signs of the member stations. Tell the DX station that they must ask any Brisbane station the question as set out in rule 6.

9. A QSL card MUST be received from the DX station for all five members before the Club Certificate can be issued. These will be checked by the Club Secretary.

10. All members must deposit one blank QSL card with the Club Secretary.

11. DX contacts may be either phone or c.w.

12. All members must reside within the Greater Brisbane area.

13. New members can only be elected on the resignation of a member, and the ballot must show a two-thirds majority after absent members have been advised by post so that they may vote.

14. A general meeting must be held at least once a year, and all members must be given at least one month's notice.

15. Office-bearers to be elected annually.

16. The quorum for a meeting shall be fourteen (14) members.

17. An entry fee of $2 per member, and an annual fee of $1 shall be payable.

18. A member whose subscription is not paid at the annual general meeting, or within ninety days thereof, automatically ceases to be a member.

19. The office-bearers shall be President, Vice-President and Secretary/Treasurer.

— . . . —

THE PRETORIA AWARD

The Pretoria Award will be issued to any Amateur station or Listener who can provide confirmation of five contacts or reports applicable to ZS6 stations listed below. A log extract certified by two licensed Amateurs, or an official of a recognised Radio Society, who has sighted the QSLs should be sent to:

The Award Custodian,
S.A.R.L. Pretoria Branch,
P.O. Box 1259,
Pretoria,
Republic of South Africa.

The claim should be accompanied by a fee of 7 IRCs for VK claimants. QSL cards should not be submitted. Any profits accruing will be applied to further the aims and interests of Amateur Radio.

Eligible contacts:

(1) Any member of the Pretoria Branch of the S.A.R.L. (this includes country members at several locations in the Transvaal).

(2) Any ZS6 Amateur station with a QTH in Pretoria or the adjoining towns of Lyttelton, Verwoerdburg, Irene, Silverton, Bapsfontein, Bronkhorstsprint.

Eligible calls include: ZSs 6AES, 6AJM, 6AJO, 6AKO, 6AMP, 6AVC, 6BLY, 6BLZ, 6KO, 6NG, 6PA, 6PB, 6PTA.

—From "Watts," the journal of the Pretoria Branch of the S.A.R.L.

— . . . —

ERRATA

Please note the following amendments to "A Transistorised Carphone—Part One, The Receiver," March 1971 issue:

(1) The coupling capacitor into pin 8 of the AWM1306 should be 0.01 μF. and not 22 pF. as shown in Fig. 3A.

(2) In Fig. 3B there should be a 10 μF. tantalum capacitor between pin 4 of the MC1454 and earth.

TECHNICAL ARTICLES

Readers are requested to submit articles for publication in "A.R.," in particular constructional articles, photographs of stations and gear, together with articles suitable for beginners, are required.

Manuscripts should preferably be typewritten but if handwritten please double space the writing. Drawings will be done by "A.R." staff.

Please address all articles to:
EDITOR "A.R.,"
P.O. BOX 36,
EAST MELBOURNE,
VICTORIA, 3002

New Equipment

YAESU FT-101 SOLID STATE TRANSCEIVER

Some time has elapsed since the Yaesu Musen Co. Ltd. of Japan produced their first solid state transceiver, model FT-100. The present model, FT-101, basically similar, incorporates the latest advances featuring 10 FETs, 3 integrated circuits, plug-in modules, noise blanker, as well as 31 silicon transistors and 38 silicon diodes. The transmitting section employs 3 tubes only, a 12BY7A driver and 2 x 6JS6A final amplifier with an output on s.s.b. of approx. 160 w. p.e.p.

The built-in dual power supply provides for operation from alternative power sources, 12v. d.c. or 234v. a.c. Selection of the appropriate power cord, from the two provided, is the only adjustment for a change-over.

A desirable feature in a set such as this is the built-in speaker. A matching external speaker, external v.f.o., c.w. filter and mobile mounting hardware are available as optional extras. It covers the usual Amateur bands of 80-10 metres, plus the 11 metre band, and includes reception of WWV on 10 MHz. Modes of operation are s.s.b., c.w. and a.m. C.w. input power is adjustable. Panel meter indicates p.a. cathode current, r.f. output, and a.l.c. On receive, the meter functions to read "S" units.

Taking into account the advantage of low current drain, the FT-101 is the perfect choice for use in a car, caravan, boat, aircraft, and field day activity. It also excells as a primary base station.

Of special interest to brass pounders, c.w. operation is a real pleasure with near perfect keying characteristics, absence of chirp, stability, high selectivity, and "break-in" with side tone monitoring.

A photo appears elsewhere in this issue, and full details are available from the Australian agent, Bail Electronic Services of 60 Shannon St., Box Hill North, Vic., 3129.

GEELONG "HAMFEST"

OVER THE WEEK-END OF

1st and 2nd MAY, 1971

Saturday: 1400 hours onward, registration and rag-chew. Dinner and entertainment.

Sunday: Displays of commercial gear, scrambles and tx hunts on 40 and 2 metres, barbecue lunch, disposals sale, entertainment for everyone.

Further details from VK3 W.I.A. Broadcast or the Geelong Amateur Radio-T.V. Club Secretary, Bob Wookey, VK3IC, P.O. Box 520, Geelong, Vic., 3220. Telephone 212674.

Book Review

SINGLE SIDEBAND FOR THE RADIO AMATEUR

Over the last twenty years the A.R.R.L. has done a great deal to popularise s.s.b. amongst the Amateur fraternity; nowadays one hears more s.s.b. than c.w. or a.m. signals, especially on the DX bands and some a.m'ers have been heard to complain that the s.s.b. operators will not talk to them.

We live in a rapidly changing world, exciting things are happening somewhere in the world every day of the week and the rate at which science is advancing is said to double itself every ten years.

The fifth edition of Single Sideband for the Radio Amateur will assist the newcomer to our hobby in becoming acquainted with the mode and bring the old-timer up to date on the more modern techniques. Sixty per cent. of the material is new and heavy emphasis has been accorded solid state devices.

This issue contains thirty-one practical constructional projects from easy-to-build station acessories through simple receivers to the more sophisticated crystal filter and phasing type exciters, transmitters and complete transceivers.

This new edition contains 256 pages and is 9½ x 6½ inches. Price is $3.30 post paid from the W.I.A. Federal Executive Publications Department or Divisional Secretaries.—VK3LC.

☆

FROM THE W.I.A. NOVICE INVESTIGATION COMMITTEE

The following extracts are taken from a letter on the subject of Novice Licensing, received from Mr. William I. Orr, W6SAI, a prominent technical writer in the field of Electronics and Amateur Radio. His opinion, as an on-the-spot observer of Novice Licensing, should offer some valid arguments to those who are in favour of such a licence on the Australian scene.

"Generally speaking, the Novice programme has been a healthy one in the U.S.A. No general opposition exists to it. Most new Amateurs (particularly teenagers) follow the Novice route. It gives them a 'taste' of Amateur Radio and encourages them to carry on. . . . Many of today's prominent Amateurs were Novices at one time, and quite likely many of them would never have taken the General examination unless their confidence had been built-up by actual on-the-air contacts and expertise they had gained during their Novice period.

"The Novice concept was introduced by the Federal Communications Comission over the reluctant acquiescence of the A.R.R.L. My personal opinion was that the A.R.R.L. was afraid that this 'sub-standard' licence would degrade Amateur Radio. Fortunately, this did not happen, and I am positive today that the A.R.R.L. supports and encourages this programme.

"Change is always difficult and hard to accept, especially in organisations which tend to reduce all to the lowest common denominator. The Novice segments in the U.S.A. tend to become a ghetto, much QRM, poor operating techniques, etc. Most General class Amateurs avoid the segments, which is a pity. Even so, the Novice learns to tune a transmitter and receiver and gains a bit of experience. Some of them do quite well.

"The great danger to Amateur Radio is not the Novice class, but the unfortunate monster created by Citizens Radio—2,000,000 licensees and many pirate operators. This has drained Amateur Radio of growth, as many would-be Amateurs take the easy road to comunicate by radio via the C.B. route, rather than by the more demanding road to Amateur Radio. Thus, anyone who has real interest in Amateur Radio should be encouraged in every way possible.

"So many interests are available to the young —t.v., motor bikes, autos, travel, marijuana, that those in authority having interest in electronics should jump for joy when a youngster evidences interest in Amateur Radio. Tomorrow's comunicators and electronic engineers are coming from this pool of manpower. It is in the interest of your country to foster this interesting and constructive hobby and advocation. I know of no better way of doing this than to appeal to the timid newcomer by means of a Novice class licence—the first rung on the ladder of Amateur Radio."

—R. C. Black, VK2YA, Chairman.

[We publish the foregoing as a matter of interest. We do not necessarily agree with all Mr. Orr's observations.—Ed.]

FEDERAL REPEATER SECRETARIAT

This month we are pleased to be able to include a report from the Gold Coast Radio Club on the first fully operational Channel 1 system in Australia. We invite the technical officers of other repeater groups to submit a report along similar lines about their own system, both for our own records and publication in "A.R."

The first report for 1971 from the F.R.S. has been produced and has been sent out. If we have missed any groups and you would like a copy, write to the F.R.S. c/o. P.O. Box 342, Crows Nest, N.S.W., 2065.

CHANNEL ONE SYSTEM ON QUEENSLAND GOLD COAST

The Gold Coast Radio Club, as a club project, has established an f.m. repeater station to service the South Eastern Qld. and North Eastern N.S.W. areas. The repeater has been P.M.G. licensed and fully operational since April 1970. Details of the repeater are as follows:

Call Sign: VK4EI/R2.

Frequency: Repeater Channel 1 (146.1 MHz. in and 145.6 MHz. out).

Location: Mt. Tamborine. Approx. 18 miles west of Southport and 40 miles south-west of Brisbane. Site elevation is approx. 2000 ft. a.s.l.

Tx: Complete valve design, multiplying from 4 MHz. xtal. 25 watts carrier output from QQE06/40 p.a. valve. The power output is soon to be boosted to 50 watts when construction of a new tx is complete.

Rx: Solid state throughout, realising 20 dB. signal to noise ratio for 0.5 microvolt p.d. input with the tx carrier on. 1st i.f. is 10.7 MHz. and incorporates a Pye 10-7C xtal filter. 2nd i.f. is 455 KHz.

Aerials: Both tx and rx use identical aerial types comprising five half-wave colinear elements, fed in phase, vertically polarised, omnidirectional and realising 8 dB. power gain. Both aerial systems are mounted 40 ft. above ground level and are horizontally separated by 250 yards. This spacing and the insertion of cavity resonators in both the tx and rx feedlines has reduced rx desensitisation to almost nil.

Availability: The repeater is available on a 24-hour basis. The rx runs continuously and when the squelch is opened the tx fils. are keyed on. Eight minutes after the squelch has closed, the tx fils. are keyed off. Following the initial squelch opening, each successive squelch operation returns the tx fils. shut-down time delay to zero.

Identification: Automatic station identification after a five-minute "carrier on" duration. Solid state keyers for morse code identification are presently being experimented with.

Coverage: Good service is available within a 200 mile diam. circle, centred on the repeater site. Good mobile to mobile QSOs have been conducted between the following areas: Lismore, Byron Bay, Brunswick Heads, Toowoomba, Brisbane, Gold Coast, North Coast resorts, Murwillumbah, Boonah and many other places.

Well that is roughly the story regarding the Gold Coast repeater. A repeater for Brisbane is still being considered by the VK4 V.h.f. Group, but as yet no sign of air testing. Channel 4 will be used for the Brisbane unit and will be known as "R1" until an official call sign is allocated.

The Gold Coast Radio Club will be only too happy to pass on information regarding the project to inform other groups of the pitfalls and their cures in establishing a repeater. A note to M. D. Adams, VK4ZDA, of Gold Coast Radio Club, P.O. Box 588, Southport, Qld., 4215, will ensure full technical details, etc., by return mail.

Recently a copy of Ken Sessions, Jnr., K6MVH's "Radio Amateur's F-M Repeater Handbook" arrived in Australia. This is an excellent publication on the subject, but much of the contents applies only to the American scene, where many Amateurs set up remote control of their stations—usually on a suitable hill-top. Other chapters are devoted to the "tone" control and access to repeaters, a system which does not apply in this country. 73, Tim VK2ZTM, Chairman F.R.S.

AMATEUR FREQUENCIES:

ONLY THE STRONG GO ON — SO SHOULD A LOT MORE AMATEURS!

VHF

Sub-Editor: ERIC JAMIESON, VK5LP
Forreston, South Australia, 5233.
Closing date for copy 30th of month.
All Times in E.S.T.

AMATEUR BAND BEACONS

VK0	53.544	VK0GR Antarctica.
VK3	144.700	VK3VE Vermont.
VK4	144.390	VK4VV 107m. W. of Brisbane.
VK5	53.000	VK5VF Mt. Lofty.
	144.800	VK5VF Mt. Lofty.
VK6	52.006	VK6VF Tuart Hill.
	52.900	VK6TS Carnarvon.
	144.500	VK6VE Mt. Barker.
	145.000	VK6VF Tuart Hill.
	435.000	VK6VF (on by arrangement).
VK7	144.900	VK7VF Devonport.
VK9	144.600	VK9XI Christmas Island.
ZL3	145.000	ZL3VHF Christchurch.
JA	51.995	JA1IGY Japan.
W	50.091	WB6KAP U.S.A.
HL	50.100	HL9WI South Korea.

Only change to the beacon list this month is the corrected location of the VK3 beacon to Vermont, not Kilsyth, as I was previously informed. March and April will be months to keep a look out on 6 metres for long distance contacts, particularly to JA and other northern areas, so the beacons listed here in those areas may be frequencies to monitor when in the shack over a week-end and doing some constructional work.

Six metres appears to have been comparatively quiet during the past month, a few signals from VK4 being around, also VK6. A letter from David VK8AU in Tennant Creek advises he and Doug VK8KK in Darwin now have their equipment operating well enough on 52.010 MHz. to allow themselves always being able to hear one another on early morning skeds. Copy is generally about 2 x 1 on s.s.b. with occasional 5 x 2 periods which allow a reasonable exchange of information. Just around local sunrise seems to be the best time. David has now started running Saturday and Sunday morning skeds with Wally VK5ZWW from 0630 to 0700, calling each alternative five minutes, David starting his transmission first. Signals have been quite good some of the time and successful exchanges were made three out of the last four attempts.

David worked JA1MRS on 2nd Feb. and on 24th Feb. JAs, HL9WI and KR6CR. Similar situation of signals being heard from same areas on 17th Feb. (So it seems some DX might be just around the corner.—VK5LP.)

I note David is interested in promoting v.h.f. winter activity and it appears he has sent details for publication in "A.R." of a winter v.h.f.-u.h.f. contest, probably during the month of July. I certainly hope it will be a successful venture, but will leave further comment until I know more about the proposed contest. Thank you for your letter, David, always pleased to hear of activities in the north. Long time since I heard from Doug VK8KK, or anyone in North Queensland!

Well, the John Moyle National Field Day Contest has been and gone. A number of stations in VK5 went out portable, but extended range contacts, particularly 2 metres, were very few and far between. My own effort was confined to 2 metres this year, for a few hours on Sunday morning. However, I was pleased to be able to include the boys manning the portable station on Mt. Arapiles (Swinbourne College Radio Society) by working VK3BES, VK3ZYT and VK3YBM, and seem to have been the only VK5 to have done so from this area. I was rather staggered to find no stations available from the south-east of VK5, and none of the usual VK3s, namely Bob 3ARM, Herb 3NN, Roy 3AXV, Roy 3AOS, Eric 3ZKN, Jim 3AEF and so I could go on. It did not seem like a v.h.f. field day without these chaps. I know conditions were not real good, looks like the call of the h.f. bands is too strong!

Fortunately, temperatures in VK5 were much lower than the Adelaide peak of 105 last year, but strong south-east winds tended to slow one down a bit. Looking eastwards from here, it appears the best contact to be made during the N.F.D. was probably that between Norm VK3ZQC portable on Mt. Tassie near Traralgon and Eddie VK1VP portable on Mt. Gingera, near Canberra, a distance of about 300 miles over a rather mountainous path. Good work chaps, shows the effort was worthwhile for a 2 metre contact.

My faithful scribe from VK3, Bob VK3AOT, sends some further useful information this month. He advises that John VK3AJM and David VK3ANP (?)—the pen's not too sharp Bob!—are fully operational on 432 MHz. and are set up to take part in the Australis Oscar 6 Balloon test. These chaps are in Wangaratta and another from the same area currently constructing 432 MHz. gear is Peter VK3APF.

1296 MHz. RECORD

Bob VK3AOT passes on the news that the 1296 MHz. record has been broken again, on 17th Feb., when Ron VK3AKC in Geelong and Kevin VK7ZAH in Launceston established contact over a path of 274.3 miles, bettering the previous record by more than 20 miles. Both stations used a.m. for the contact, with signal reports around S5. The equipment at VK7ZAH comprises a 2C39 tripler producing about half a watt output and a 5 feet by 2 feet parabolic section antenna. After the initial contact, a test signal from VK3AKC was heard for 90 minutes by VK7ZAH and VK7JV. Congratulations go to both for a great effort, and particularly to Ron, who previously only held the record for six hours! A late report indicates that both stations again made contact on 1296 at 1755 on 27th Feb., VK7ZAH being received at S4 and VK3AKC at S6. Ron will soon be running out of suitable territory in Tasmania if he continues to push his signals south, next we may hear he has moved to Lakes Entrance and concentrating signals on the path to New Zealand!

Bob continues his writing with some excerpts from the latest release from the P.M.G. Dept. showing the growth rate of various radio services for the 1969-70 financial year. Amateur full licences increased by 6.1% and limited licences by 6.3%. The overall growth rate of radio communication stations was 16.1%, while the population growth for the same period was 2.08% Some sobering thoughts come out of those figures if you care to reflect for a moment. Many thanks again Bob for your continued support of these columns.

A further reminder of the Geelong Amateur Radio and TV Club Hamfest scheduled for 1st and 2nd May. No further news of this event has arrived but no doubt separate information will be made available through "A.R."

From the pages of the West Australian V.h.f. Group News Bulletin comes news that VK6VF went portable for the N.F.D. at the Eagle Hill Forestry Lookout. Activity was definitely multiband, c.w. on 3.5 and 7 MHz., s.s.b. on 3.5, 7, 14, 21 and 28 MHz., a.m. on 27, 28 and 52 MHz., f.m. on 52 and 144 MHz. And while on the subject of the beacon, noted also in the same publication advice to the effect that the 2 metre beacon has been recently modified and now at 18 watts has more than trebled its previous power. The 6 metre beacon has also been strengthened up somewhat since its old 6/40, which was half-dead, has been buried!

HL9WI WORKED IN VK6

News has just trickled through for this Stop Press item that HL9WI in South Korea was worked over a wide area on 1st March. It appears a total of five VK6s were worked, the only one mentioned by name so far being Peter VK6ZDY, while contacts were also made to Doug VK8KK, David VK8AU and VK9BB. The band was still open to the north at 1830 and there is an unconfirmed report of a VS6 working into VK6. David VK8AU reported hearing the HL9WI beacon at S3 at 2219, which is getting rather late for contacts or hearings of this nature. So it looks as though March and April could be interesting months for 6 metres, as mentioned earlier.

A brief note to hand mentioned Wally VK-5ZWW and David VK8AU were successful in having a 20-minute contact via meteor scatter on 28th Feb. So it looks as though the Saturday and Sunday morning skeds are paying off. Bob VK5ZDX is now operational on 52 MHz. s.s.b. with an FT200 feeding a transverter with a QQE06/40 in the final. This is designed to run into a high powered linear and when finished he hopes too to join in the M/S experiments. Wally VK5ZWW, by the way, would be pleased to hear from anyone prepared to run some skeds with him using M/S. He is rather interested in finding someone in the Eastern States with s.s.b. gear preferably, who will turn the beam in his direction.

No news has come to hand about any portable operation during Easter, so various areas will need to rely on their weekly broadcasts for such information. But I do suggest if you are in the shack over Easter, keep a wary eye on 6 metres with the beam north, particularly during the afternoon and early evening periods—you may well hear something worthwhile, as the Easter period will probably bring more stations on the air than usual. For the sake of something to monitor, try JA1IGY on 51.995 or the Russian t.v. sound channel on 59.750 MHz.

News has been somewhat scarce this month, only two letters received, but there may be more next time. In closing here is the thought for the month: "A church is a hospital for sinners, not a museum for saints." Until next month, 73, Eric VK5LP. The Voice in the Hills.

MEET THE OTHER MAN

Meet Wally Watkins, VK5ZWW, of Bellevue Heights, a suburb of Adelaide on the slopes of the Mt. Lofty Ranges, at an elevation of 750 feet, living amongst the elite and able to look down on most of the population of Adelaide.

Wally formerly was ZL2TCW, living at Lower Hutt, New Zealand, and several years ago came to Australia with his wife Dorothy and family; there seems no evidence of any of them arriving in chains! Wally was first licensed in 1963 and while in New Zealand was a keen DX enthusiast, particularly on 144 MHz., from where he worked ZL1, 2 and 3, and VK2 and VK5, the latter including the contact with Hughie VK5BC, a distance of 1950 miles, running 30 watts a.m. From his present location on 52 MHz. he has worked VK1, 2, 3, 4, 5, 6, 7 and 8, JA1, 2, 3, 4 and 5. On 144 MHz. areas worked are VK3, 5, 6 and 7 and contacts have been made within VK5 on 432 MHz.

Equipment in use at present on 52 MHz. uses a QQE06/40 in the final, running 150 watts d.c. input s.s.b. to a 9 element yagi up 30 feet. He uses a VK3 FET converter. The system changes to a.m. for 144 MHz. and runs 100 watts to a 829B, modulated by a pair of 2N174s, and coupled to a 6/6 slot antenna up 30 feet, with a home-brew converter using 6CW4 front-end. Back to s.s.b. for 432 MHz., running 15 watts to a 6939, 16 element collinear up 30 feet, VK5 FET converter. The tunable i.f. in each case is an FTDX100.

Wally is a member of the W.I.A., was a member of the Amateur Advisory Committee for 1970, and supplies the v.h.f. notes for the VK5 Journal. He operates portable from time to time on 52 MHz. when his work as a surveyor with the Commonwealth Government takes him to suitable areas, and ocasionally tries 144 MHz. At present is actively interested in 52 MHz. scatter, and has successfully worked David VK8AU in Tennant Creek on a number of occasions using this method. His future plans include attempts to work all States on 52 MHz. meteor scatter and with this in mind is planning to increase power on 52 MHz. to the legal limit. He also is planning equipment for 144 MHz. s.s.b.

VK5 finds in Wally a worthwhile asset for Amateur Radio, one who likes to see things done, and is not afraid to speak his mind at meetings, treading on a few corns in the process no doubt, but his words are meant well. Pleased to have you living with us, Wally.

John VK2ZJQ adjusts a 10 el. 2 metre yagi. Top antenna is a 15 el. 432 MHz. yagi. Beneath John are a pair of 146 MHz. vertical 10 el. yagis and a 4 el. 6 metre yagi. The tent in the background housed a 2 kva. motor-generator set. These aerials were in use by VK3AOT/P at Mt. Cowley from 18/12/70 to 2/1/71.

NEW CALL SIGNS

NOVEMBER 1970

VK1ZT—H. N. Sandford, Station: 4 Woodgate St., Farrer, 2607; Postal: P.O. Box 468, Manuka, 2603.
VK2CI—A. C. Counsell, 11 Allendale St., Beresfield, 2322.
VK2BBZ—J. D. Holt, 19 Dorset St., Northbridge, 2063.
VK2BKG—K. J. Graham, 31 Rangers Retreat Rd., Frenchs Forest, 2086.
VK2BMH—M. F. Potts, 23 Stapleton St., Wentworthville, 2145.
VK2BMX—W. S. Munn, 19 Kenibea Ave., Kahibah, 2290.
VK2BNW—N. G. Wallage, 23 Sylvia Pl., Frenchs Forest, 2086.
VK2ZBR—B. H. Ridley, 21A Nepean Ave., Normanhurst, 2076.
VK2ZEB—E. F. Breen, 24 Azalea Ave., Coffs Harbour, 2450.
VK2ZQL—P. J. Brown, 56 Joslin St., Kotara South, 2288.
VK3BH—B. W. Horan, 35 Ropley Ave., Balwyn, 3103.
VK3EB—J. E. Falkner, 17 Burgess St., Hawthorn, 3122.
VK3HX—T. D. Hogan, "Madang," King Lake Rd., Cottles Bridge, 3099.
VK3ALI—The Austin Electronics Society, Rehabilitation Workshop, Austin Hospital, Heidelberg, 3084.
VK3AUV—K. A. Palliser, 3/30 Cootamundra Cres., Blackburn, 3130.
VK3AWS—Western Suburbs Radio Club, Station: 265 Elizabeth St., East Coburg, 3058; Postal: 115 Mitchell St., Maidstone, 3012.
VK3BEF—N. J. Daye, Yooralla Rd., Rye, 3941.
VK3BEI—I. L. Eadie, 9/1 Dun Craig Ave., Armadale, 3143.
VK3BEJ—R. C. Lile, 1/192 The Avenue, Parkville, 3052.
VK3BEL—H. N. Cooper, 48 Bond St., Ringwood, 3134.
VK3BEN—J. M. Ban Demark, 1 Oak St., Beaumaris, 3193.
VK3BEO—Y. E. Mak, 65 Dwyer St., Clifton Hill, 3068.
VK3BEQ—J. W. McCulloch, 5/1A Clifton St., Clifton Hill, 3068.
VK3BSA—Blackburn District Boy Scouts' Assn. Radio Club, 74 Springvale Rd., Nunawading, 3131.
VK3CCR—B. M. Richardson, 31 Jennings St., Laverton, 3028.
VK3YEE—E. R. Russell, 164 Kangaroo Rd., Oakleign, 3166.
VK3YEJ—G. W. Lock, Deakin Ave., Mildura South, 3500.
VK3YEK—J. E. Beevers, Station: 11th St., Mildura West, 3500; Postal: P.O. Box 32, Mildura, 3500.
VK3YEL—E. W. Ross, 27 Carween Ave., Mitcham, 3132.
VK3YEM—J. A. Gilmour, 1A Milton St., Canterbury, 3126.
VK3YEN—D. Moore, 181 Faraday Rd., South Croydon, 3136.
VK3YEO—A. H. McKibbin, 27 Beverley St., East Doncaster, 3109.
VK3YEW—P. W. Carigg, 2 Hemingford Rd., East Bentleigh, 3165.
VK3YEX—A. E. Fisher, 9 Birdwood St., Box Hill, 3128.
VK3YEZ—R. P. Dyson, Tannery Lane, Mandurang, via Bendigo, 3551.
VK3YFS—N. Spano, 3 Seaholme Ave., Seaholme, 3018.
VK4VY—P. R. Cox, 245 Stanley Tce., Taringa, 4068.
VK4WG—W. G. G. Clayton, 18 Boundary St., Railway Estate, Townsville, 4810.
VK4ZJW—W. J. Mather, 9 Ilkinia Ave., Florida Gardens, 4217.
VK4ZLC—R. G. Melton, 39 Woodlea St., Moorooka, 4105.
VK4ZRE—S. R. Chappel, Archer St., Woodford, 4514.
VK5MC—C. E. Skeer, Hatherleigh, via Millicent, 5280.
VK5OD—J. L. Guthberlet, Station: Davidson Ave., Crafers, 5152; Postal: P.O. Box 22, Crafers, 5152.
VK5UD—L. L. Schumacher, Station: C/o. Woomera Amateur Radio Club; Postal: Flat 360, Block 3V, Dewrang Ave., Woomera, 5720.
VK5YH—C. Hagoort, 1 Larkdale Ave., Paradise, 5075.
VK5CGB—L. Pace, C/o. G.P.O., Perth, 6001.
VK5ZIN—I. F. Bull, Station: Section 910, Hundred of Wallaroo; Postal: P.O. Box 50, Kadina, 5554.
VK6PO—J. C. Smyser, C/o. 9 The Grove, Wembley, 6014.
VK6ZBM—A. J. Vingerhoets, 206 Newborough St., Karrinyup, 6018.
VK8AD—A. M. Miers, 7 Grady Cres., Alice Springs, 5750.
VK8LG—G. L. Gordon, 24 Milner Rd., Alice Springs, 5750.

CANCELLATIONS

VK2NW/T—D. W. Bridge. Transferred to W.A.
VK2ABG—G. R. Hughes. Now VK9GH.
VK2AYR—W. A. Rowse. Not renewed.
VK2BLZ—L. L. G. Meek. Now VK9LM.
VK2BPO—J. C. Smyser. Now VK6PO.
VK2BRG—R. G. Gibson. Transferred to S.A.
VK2ZMP—M. F. Potts. Now VK2BMH.
VK3EB—J. M. Endacott. Not renewed.
VK3AAQ—N. S. Maddern. Transferred to Qld.
VK3AWY—L. T. White. Not renewed.
VK3BDH—T. D. Hogan. Now VK3HX.
VK3BDP—J. E. Falkner. Now VK3EB.
VK3ZOU—J. C. Spence. Not renewed.
VK4OH—H. Overend. Transferred to T.P.N.G.
VK4QN—D. R. Ham. Transferred to T.P.N.G.
VK4WQ—Wireless Institute of Australia (Wide Bay and Burnett Branch). Not renewed.
VK4ZLA—L. A. Hughes. Not renewed.
VK4ZLR—A. R. Langmead. Not renewed.
VK5AG—A. M. Miers. Now VK8AD.
VK5FS—J. L. Guthberlet. Now VK5OD.
VK5HJ—H. J. Town. Transferred to N.S.W.
VK5VU—V. W. Stallan. Transferred to Qld.
VK5ZFA—C. E. Skeer. Now VK5MC.
VK6KB—K. E. Buskirk. Returned to U.S.A.
VK6AM—J. A. Moran. Transferred to Vic.
VK6ZFK—R. J. Pether (Rev.). Not renewed.
VK6ZGE—G. A. Koziol. Not renewed.
VK7JM—J. W. McCulloch. Now VK3BEQ.
VK7ZJM—J. M. G. Vout. Not renewed.

☆

LICENSED AMATEURS IN VK

NOVEMBER 1970

	Full	Lim.	Total	
VK0	10	0	10	
VK1	83	31	114	
VK2	1408	463	1871	
VK3	1315	642	1957	
VK4	526	194	720	
VK5	520	234	754	
VK6	361	138	499	
VK7	163	69	232	
VK8	35	12	47	
VK9	91	8	99	
	4512	1791	6303	Grand Total

NEW SHIPMENT OF

G8KW TRAP-TUNED ANTENNA INDUCTANCES

KIT OF TWO WITH CENTRE INSULATOR

PRICE $18.50

(Full instructions with each kit)

WILLIAM WILLIS & CO. PTY. LTD.

77 Canterbury Rd., Canterbury, Vic., 3126

Phone 836-0707

V.K. ELECTRONICS

63 HAROLD ST., DIANELLA, W.A., 6062

Service to Transceivers, Receivers, Transmitters, Antennae, etc.

Phone 76-2319

REPAIRS TO RECEIVERS, TRANSMITTERS

Constructing and testing: xtal conv., any frequency; Q5-ers, R9-ers, and transistorised equipment.

ECCLESTON ELECTRONICS

146a Cotham Rd., Kew, Vic. Ph. 80-3777

SUBSCRIPTIONS DUE

All members of the W.I.A. are reminded that annual subscriptions are now due and should be paid promptly to their Divisional Secretary. Non financial members will not receive a copy of "A.R.," and back copies may not be available upon request. To preserve continuity of your files of "A.R.," please pay your annual subscription now.

HAMADS

Minimum $1 for forty words. Extra words, 3 cents each.

HAMADS WILL NOT BE PUBLISHED UNLESS ACCOMPANIED BY REMITTANCE.

Advertisements under this heading will be accepted only from Amateurs and S.w.l's. The Publishers reserve the right to reject any advertising which, in their opinion, is of a commercial nature. Copy must be received at **P.O. 36, East Melbourne, Vic., 3002,** by **5th of the month** and **remittance must accompany** the advertisement.

FOR SALE: As new Trio TS510 plus matching PS510 mains power (240v. a.c.) supply and matching remote VFO 5D. All facilities and 160w. p.e.p. Suitable transverter operation also. Is latest transceiver from Trio. Connecting leads, plugs, handbooks, alignment tool, spare relay and set of valves included. $475 or sensible near offer. Also Yaesu Musen VFO 50B and maching F Series Generator Board with all relevant ccts., $90. Telephone Melbourne (03) 20-4329 after hours.

FOR SALE: Hallicrafters SX25 Communications Rcvr., product detector, handbook, 240v. a.c. input, $45 o.n.o. Home-brew five-band S.S.B. Phasing Xmitter, 100w., complete with power supplies, mic., cables (see "A.R." Oct. 1962), $40. VK5XB, Kingston, S.A., 5275.

FOR SALE: HT32 Hallicrafter Transmitter in immaculate condition. Sweetest sounding s.s.b. tx on the air. Xtal filters. $250 o.n.o. VK3ACN, P.O. Box 104, Bendigo, Vic., 3550.

FOR SALE: Many different audio valves, 25c each. Transistors 25c. Diodes 10c. Miniature 3-gang tuning capacitors 30c. Resistors 1c. Capacitors 1c. Transformers 50c, $1, $2, etc. Connectors (multi-pin) 20c. Metal rectifiers 50c. Pre-punched chassis 50c. 5BP1 CRT $3. Double shields for CRTs $5. Potentiometers 20c. Switches 10c. Radio Dials 5c, 10c. Ring N. Gammon, 25-4127 (Melb.) week-ends. 2 Osric St., Ashburton, Vic.

FOR SALE: Partially constructed S.S.B. Transceiver with most components; set of xtals for 5.3 MHz. filter; plus box of tubes, assorted relays, dynamic mic., selsyns, etc.; the lot only $47.50. Hustler 4BTV Trap Vertical with 80 metre top section, as new, $45. 48 Orchard St., Glen Waverley, Vic., 3150. Phone 232-9492.

FOR SALE: Tektronix dual-beam C.R.O. Type 561B. With plug-in 3A6 and 3B3. Calibrated, delayed sweep. 500ns/div. to 1s/div. time base. Dual-trace amplifier d.c. to 10 MHz. within 3 dB. First appeared in 1969. New price $2,000. Phone (Melb.) 347-2674 (evenings) or 340-5451 (work). John Spence. $800 or offer.

FOR SALE: Yaesu Musen FR-DX-400 Amateur Receiver, c.w. filter, A1 condition, $280. Yaesu Musen FL-200B Transmitter, $225. O. Sass, 12 Ruswell Ave., Warners Bay, N.S.W., 2282.

WANTED: Small Communication Rx, used AR7 or similar. Phone (Melb.) A.H. 359-1039.

WANTED: Swan Cygnet or similar. Please state condition, price required, be reasonable. A. Cundy, 34 Winchester Rd., Clovelly, N.S.W., 2031.

WANTED: Twelve octal valve bases in good condition. Also 6J8, 6U7, 6V6, 6G8, 6F6, two of each. Will swap pair of 813s or power chokes. Sell heavy duty power supply parts, also Pye 6 mx transceiver. Offers. VK3WW, 465-2991 (Melb.).

COOK BI-CENTENARY AWARD

The following additional stations have qualified for the Award:

Cert. No.	Call	Cert. No.	Call	Cert. No.	Call
1149	DJ6ZT	1187	EA6BN	1226	VE3EYO
1150	AX5NM	1188	K4CIA	1227	F9IQ
1151	AX7PS	1189	AX2DA	1228	HL9WT
1152	AX2ACZ	1190	AX2KM	1229	9M8OEA
1153	WA5UHR	1191	W8BDO	1230	AX6HE
1154	EA8GK	1192	JA1IKA	1231	W8UMR
1155	ZM2BW	1193	AX2AXJ	1232	WB4LFV
1156	PA0QT	1194	JA1DVN	1233	W4ELB
1157	AX2VN	1195	DK2BL	1234	W6HX
1158	ZK2AG	1196	DK2WY	1235	JA6JBR
1159	ZS6VC	1197	JA6KZ	1236	AX2ARV
1160	ZS6QC	1198	ZM1HV	1237	9G1FF
1161	AX2AW	1199	W2FCR	1238	FR7ZG
1162	JH1BLX	1200	W5RO	1239	ZE6JL
1163	AX5HM	1201	AX8AZ	1240	K9ECE
1164	W5KYD	1202	AX2ABC	1241	AX3HK
1165	DL9EM	1203	AX3AMU	1242	AX3NJ
1166	I1ACY	1204	AX2ANZ	1243	VE3FFM
1167	JA3FD	1205	AX2AGV	1244	AX2ATA
1168	G3WGF	1206	DL6KB	1245	W3WGH
1169	AX1AG	1207	WB2NYM	1246	W0JMB
1170	W3AZD	1208	W6AAK	1247	W8AJW
1171	W4ATP	1209	MP4BHH	1248	UA6DG
1172	AX2BDC	1210	AX2BFA	1249	TI8PE
1173	G3ZDI	1211	WB2JYM	1250	W6DKQ
1174	W9AG	1212	VE1AIH	1251	SM0CER
1175	W7AIW	1213	W4EWR	1252	YU3ZV
1176	WA6HOM	1214	ZM4AW	1253	HL9KN
1177	W5DOE	1215	ZM2AJQ	1254	W2LEJ
1178	JA1OTE	1216	AX2GV	1255	AX3AKS
1179	VS6CW	1217	OZ4EZ	1256	ZS1MH
1180	DJ8JY	1218	JR1BEK	1257	W6CWK
1181	OE3RHA	1219	JH1JGX	1258	EA3NI
1182	K4WZG	1220	EA4CR	1259	W5NW
1183	DL6CL/	1221	G3RUX	1260	DK2XA
	W2	1222	AX2AZV	1261	YU2NEG
1184	YV3UF	1223	VE2CN	1262	CE3OE
1185	WB6BKD	1224	WA5ZXO	1263	JA2NDQ
1186	GM5NW	1225	F5LK	1264	HS3ADW

V.H.F./U.H.F. SECTION

Cert. No.	Call
20	AX3AOT
21	AX7ZRO

W.I.A. D.X.C.C.

Listed below are the highest twelve members in each section. Position in the list is determined by the first number shown. The first number represents the participant's total countries less any credits given for deleted countries. The second number shown represents the total D.X.C.C. credits given, including deleted countries. Where totals are the same, listings will be alphabetical by call sign.

Credits for new members and those whose totals have been amended are also shown.

PHONE

VK5MS	319/343	VK4FJ	287/307
VK6RU	317/342	VK4TY	284/288
VK3AHO	311/326	VK2APK	281/287
VK6MK	304/324	VK2AAK	274/279
VK4KS	302/317	VK3TL	271/277
VK5AB	297/314	VK3ZE	265/268

New Members:

Cert. No.	Call	Total
115	VK7DK	231/231
116	VK3ADO	102/102

Amendments:

VK2SG	258/260	VK4RF	199/199
VK4UC	253/253	VK2AHH	196/206
VK3VK	238/238	VK3TG	175/179

C.W.

VK2QL	303/326	VK3NC	274/300
VK3AHQ	301/315	VK3XB	270/287
VK4FJ	290/315	VK3ARX	270/279
VK2AGH	282/296	VK6RU	266/289
VK2APK	280/288	VK4TY	259/272
VK3YL	280/297	VK3TL	255/260

Amendments:

VK4RF	175/187	VK2AHH	135/144
VK2SG	141/145		

OPEN

VK6RU	318/343	VK4KS	303/322
VK2AGH	314/334	VK2EO	302/325
VK2VN	310/328	VK3ARX	299/308
VK4SD	306/321	VK2APK	298/309
VK4TY	306/321	VK4EJ	298/323
VK6MK	304/324	VK2SG	294/300

Amendments:

VK4UC	282/283	VK2AHH	214/228
VK4RF	240/252		

SOANAR ELECTRONICS

For Your Every Component Need

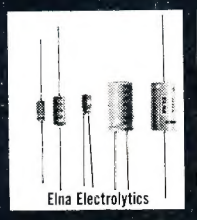
Elna Electrolytics

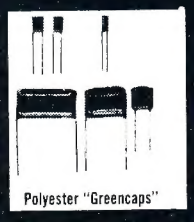
Polyester "Greencaps"

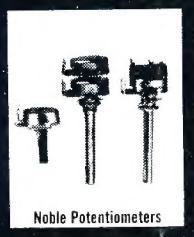
Noble Potentiometers

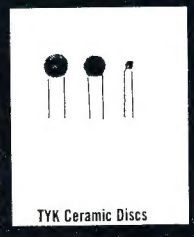
TYK Ceramic Discs

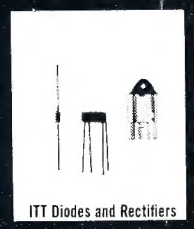
ITT Diodes and Rectifiers

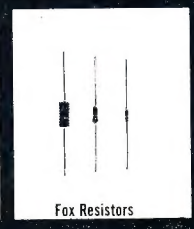
Fox Resistors

New 1971 20 page catalogue available

SOANAR ELECTRONICS Pty. Ltd.

A+P SOANAR GROUP

SALES OFFICES
VIC.: 30-32 Lexton Rd., Box Hill. 89 0238.
NSW: 82 Carlton Cr., Summer Hill. 798 6999.
SA: 470 Morphett St., Adelaide. 51 6981.

INTERSTATE AGENTS
QLD: R. A. Venn Pty. Ltd., Valley. 51 5421.
WA: Everett Agency Pty. Ltd., West Leederville. 8 4137

Sole Australian Agents

LOW DRIFT CRYSTALS

☆

1.6 Mc. to 10 Mc., 0.005% Tolerance, $5

☆

10 Mc. to 18 Mc., 0.005% Tolerance, $6

☆

Regrinds $3

THESE PRICES ARE SUBJECT TO SALES TAX

SPECIAL CRYSTALS: PRICES ON APPLICATION

MAXWELL HOWDEN

15 CLAREMONT CRES., CANTERBURY, VIC., 3126

Phone 83-5090

LOG BOOK

AVAILABLE IN TWO TYPES— VERTICAL OR HORIZONTAL

Larger, spiral-bound pages with more writing space.

Price 75c each

plus 22 Cents Post and Wrapping

Obtainable from your Divisional Secretary, or W.I.A., P.O. Box 36, East Melbourne, Vic., 3002

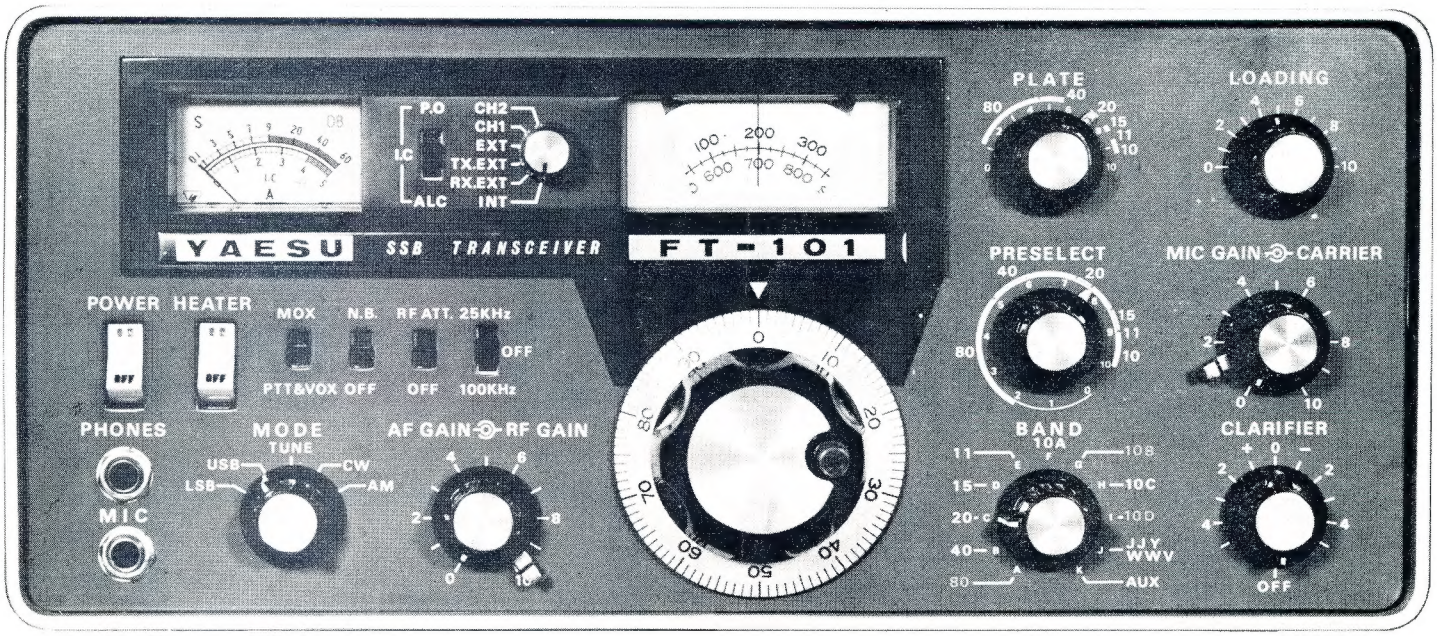

SOLID-STATE BREAK THROUGH *from YAESU*

FT-101 Dual Power Supply TRANSCEIVER

Perfect choice for car, caravan, boat, aircraft, field day activity, or primary base station

FEATURE CHECK LIST

- Built-in AC and DC power supplies
- Built-in WWV 10 MHz. band
- Noise Blanker
- 25 and 100 KHz. Calibrators
- Built-in VOX
- ±5 KHz. Clarifier
- Break-in CW with Side Tone
- 1 KHz. Dial Read Out
- Selectable SSB
- AM Capability
- Built-in Speaker
- Microphone
- Dual VFO Adaptor
- Crystal Channel Oscillator

ACCESSORIES (optional extras)

External VFO .... Model FV-101
External Speaker .. .. Model SP-101
Mobile Mounting Bracket
CW Filter (600 Hz.)

SPECIFICATIONS

Maximum Input Power: 300W. speech peak SSB, 180W. CW, 80W. AM.
Sensitivity: 0.3 microvolt for 10 dB. S/N.
Selectivity: 2.4 KHz. (6 dB. down), 4.2 KHz. (60 dB. down).
CW Filter: 0.6 KHz. (6 dB. down), 1.2 KHz. (60 dB. down).
Frequency Range: 3.5 to 4, 7 to 7.5, 10 to 10.5, 14 to 14.5, 21 to 21.5, 27 to 27.5, 28 to 30 MHz.

GENERAL

Frequency Stability: Less than 100 Hz. drift in any 30-minute period.
Antenna Impedance: 50 to 100 ohms-SWR 2:1 or less.
Audio Output: 3 watts, 350-2200 Hz., 4 ohms impedance.
Devices and Tubes: 10 FETs, 3 IC, 31 Si Tr, 38 Si Diodes,
One 12BY7A driver, two 6JS6A final amp.
Power Source: 12 volts DC, or 100, 117, 200, 220, 234 volts AC.
Power Consumption: AC: Receive 0.5A., Transmit 3A.
DC: Receive 0.5A., Standby 5A., Transmit 20A. max.
Dimensions: 13½" wide, 6" high, 11½" deep.
Weight: 30 pounds.

All sets are pre-sales checked for operation on all bands, and covered by our 90-day warranty. Full facilities are available for after-sales service.

Sole Authorised Australian Agent:

BAIL ELECTRONIC SERVICES

60 SHANNON STREET, BOX HILL NORTH, VIC., 3129. Telephone 89-2213

N.S.W. Rep.: **STEPHEN KUHL, P.O. Box 56, Mascot, N.S.W., 2020.** Telephone: Day 67-1650 (AH 37-5445)
South Aust. Rep.: **FARMERS RADIO PTY. LTD., 257 Angas St., Adelaide, S.A., 5000.** Telephone 23-1268
Western Aust. Rep.: **H. R. PRIDE, 26 Lockhart Street, Como, W.A., 6152.** Telephone 60-4379

radioparts
PROPRIETARY LIMITED

CUSTOMER SERVICE

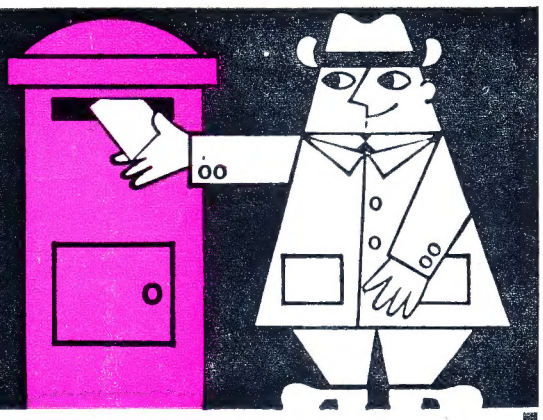

Distributors
For Australian and
International
Manufacturers . . .

TEST EQUIPMENT:

RAPAR • BWD
SWE-CHECK • HORWOOD

Call and see our big range of test equipment

SEMI-CONDUCTORS:

TEXAS INSTRUMENTS
FAIRCHILD AUSTRALIA
PHILIPS • DELCO • ANODEON

1971-72 CATALOGUE NOW AVAILABLE, $3

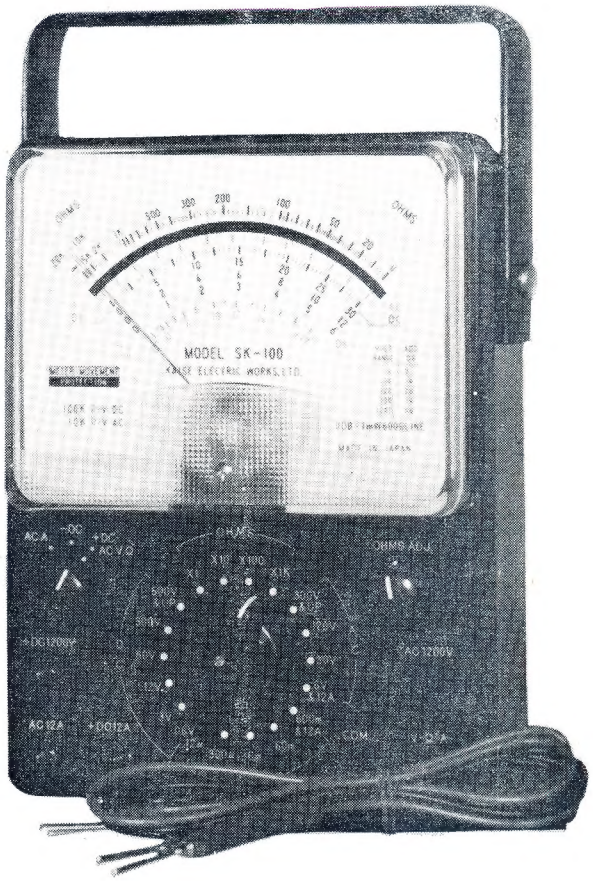

RAPAR Model SK100 Multi-tester

radio parts
GROUP

562 Spencer St., West Melbourne, Vic., 3003. Ph. 329-7888, Orders 30-2224
City Depot: 157 Elizabeth Street, Melbourne, Vic., 3000. Phone 67-2699
Southern Depot: 1103 Dandenong Rd., East Malvern, Vic., 3145. Ph. 211-6921

OPEN SATURDAY MORNINGS!